PALMIYE

Four Seasons Outdoor Living Areas

Price CATALOGUE 2019

Expose
your outdoor world
to happiness.

I N D E X

SILVER 07

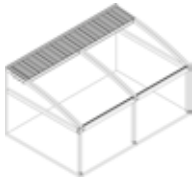

CORAL 25

SATIN 43

GALA 53

CROWN 67

PANORAMA 88

APOLLO 115

MARINE 141

BRIDGE 151

LEGEND 161

COSMO 167

FABRIC PRICE & INFORMATION 172

Version 02/2019

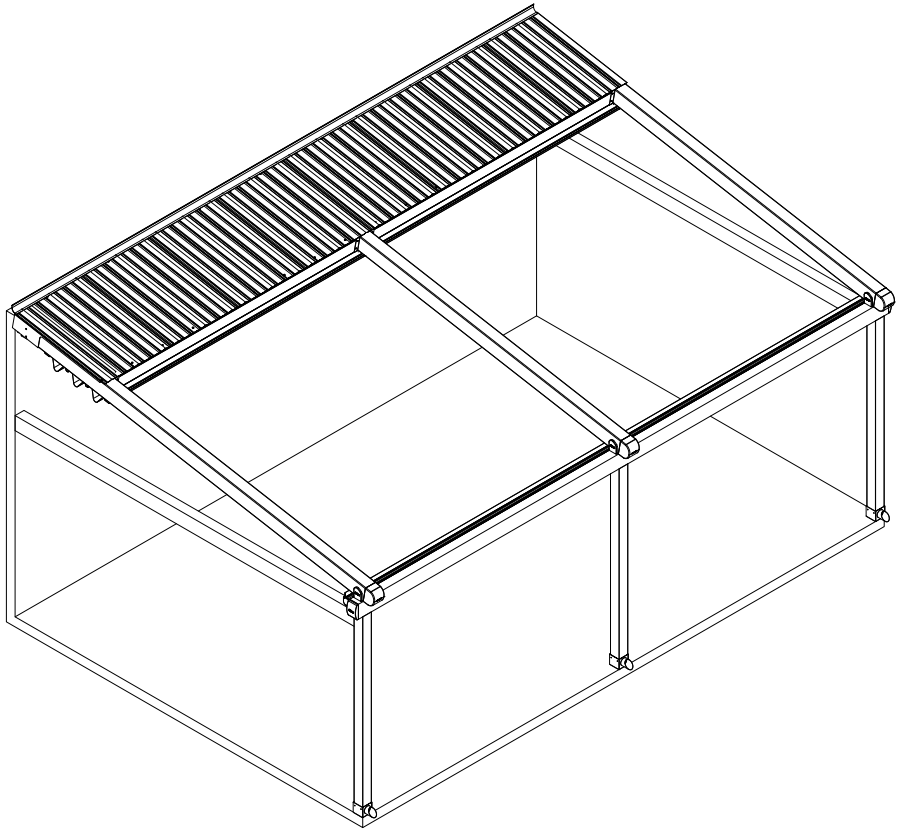

SILVER

I N D E X

PRODUCT FORMS

- **SILVER PLUS** Wall / Ceiling Installation

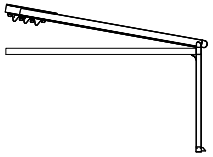

- **SILVER PLUS** Freestanding

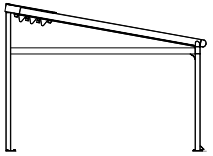

- **SILVER COMPACT** Wall / Ceiling Installation

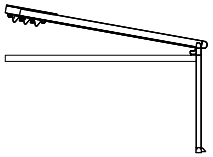

- **SILVER COMPACT** Freestanding

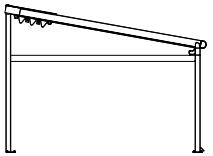

SILVER

PLUS

Wall / Ceiling

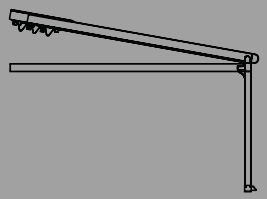

MAXIMUM DIMENSIONS

	WIDTH	PROJECTION
2 RAILS	450 cm	1000 cm
3 RAILS	900 cm	1000 cm
4 RAILS	1300 cm	700 cm

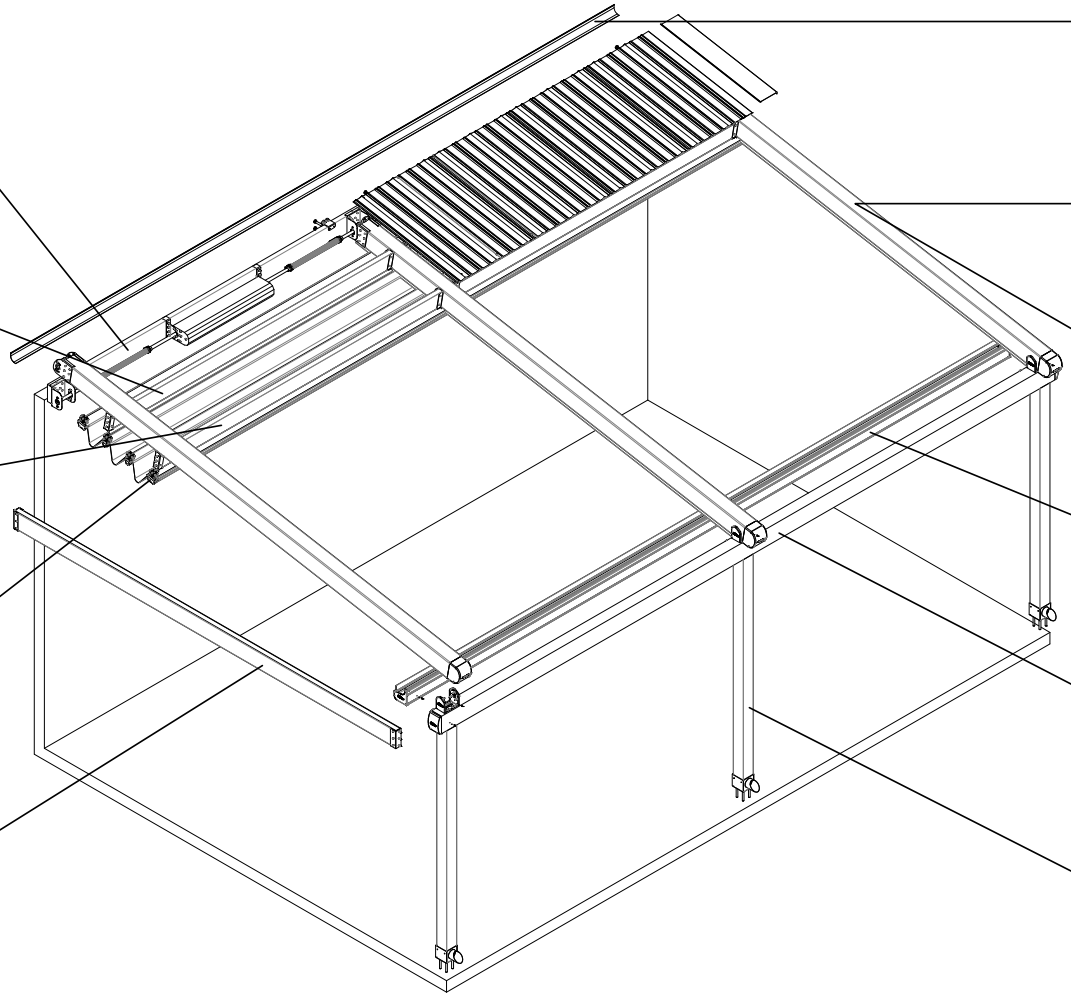

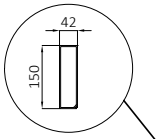

ALM.PRF.G1012
Back Beam

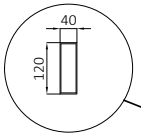

ALM.PRF.G1019
Cross Beam

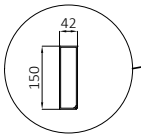

ALM.PRF.G1012
Front Cross Beam

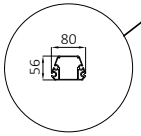

ALM.PRF.P1030
Fabric Support Profile (Double)

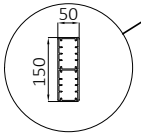

ALM.PRF.G1009
Side Beam

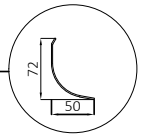

ALM.PRF.G1011
Wall Finish

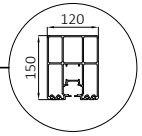

ALM.PRF.P1009
Rail Profile (8-10m)

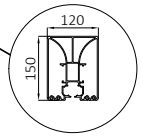

ALM.PRF.P1003
Rail Profile

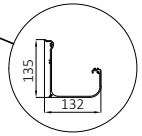

ALM.PRF.P1007
Gutter

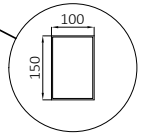

ALM.PRF.G1003
Front Beam

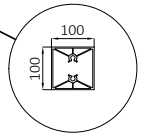

ALM.PRF.G1001
Front Pillar

TECHNICAL FEATURES

COLLECTED FABRIC DIMENSIONS

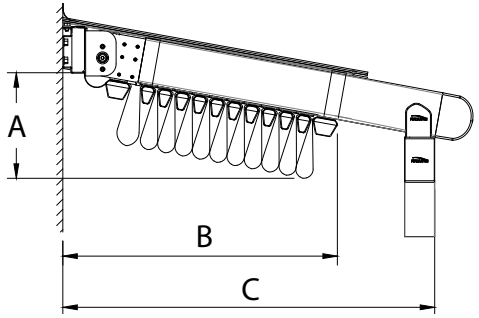

Projection cm

No of Fabric Support Profiles	185	235	284	334	383	433	482	532	581	631	680	729	779	828	878	927	977	C
4	34																	61
5		35																68
6			36															74
7				37														81
8					38													87
9						39												94
10							40											100
11								41										107
12									42									113
14										44								126
											45							
16												46						139
17													47					146
18														48				152
19															49			159
20																50		165
																	51	172

A B

*Calculated according to a slope of 15%

DRAINAGE CALCULATION

Type	Max. m²
Full	39 m²/pc
Half	18 m²/pc

* per drainage

There should be at least one drainage, each 8 m length gutter.

MINIMUM SLOPE CHART

Projection

Slope	6,4-7,9%	7,4-8,8%	8,4-9,7%	9,4-10,8%	10,4-12%	11,2-12,7%	12-13,4%	13-14,5%	14-15,7%	15-16,6%	16-17,6%
Rail Center											
	200	**225**	**250**	**275**	**300**	**325**	**350**	**375**	**400**	**425**	**450**
250	16	19	21	24	26	28	30	33	35	38	40
300	20	23	26	29	31	34	37	40	42	45	48
350	23	27	30	34	37	40	43	46	49	53	56
400	27	31	35	39	42	46	49	53	57	61	64
450	32	36	40	44	48	52	56	60	64	69	73
500	36	41	45	50	54	59	63	68	72	77	81
550	40	45	50	55	60	65	70	75	80	85	90
600	44	50	55	61	66	72	77	83	88	94	99
650	49	55	61	67	72	78	84	90	96	102	108
700	54	60	66	73	79	85	91	98	104	111	117
750	59	66	72	79	85	92	99	106	112	119	126
800	63	70	77	85	92	99	106	114	121	129	136
850	67	75	82	91	99	106	113	122	130	138	146
900	71	79	87	97	106	113	120	130	139	148	156
950	75	84	92	103	113	120	127	138	148	157	166
1000	79	88	97	109	120	127	134	146	157	167	176

*Note: Max. slope can be up to 25%

For back height of system 30 cm should be added to slope value.

WIND RESISTANCE

WIDTH (cm)

PROJECTION (cm)	450	500	550	600	650	700	750	800	850	900	950	1000	1050	1100	1150	1200	1250	1300
400	11	11	11	11	11	11	11	11	11	11	11	11	11	11	11	11	11	11
450	11	11	11	11	11	11	11	11	10	10	11	11	11	11	11	11	11	11
500	11	11	11	11	11	10	10	10	10	9	11	11	11	11	11	11	11	11
550	11	11	11	10	10	10	9	9	9	9	11	11	11	11	10	10	10	10
600	11	10	10	10	10	9	9	9	8	8	11	10	10	10	10	10	10	10
650	10	10	9	9	9	9	9	8	8	8	10	10	9	9	9	9	9	9
700	10	9	9	9	9	8	8	8	8	8	10	9	9	9	9	9	9	9
750	9	9	8	8	8	8	8	7	7	7	9	9	8	8	8	8	8	
800	9	8	8	8	8	7	7	7	7	7	9	8	8	8	8	8		
850	8	8	8	8	7	7	7	7	7	7	8	8	8	8	8			
900	8	8	7	7	7	7	7	7	6	6	8	8	7	7				
950	7	7	7	7	7	6	6	6	6	6	7	7	7					
1000	7	7	7	6	6	6	6	6	6	6	7	7						

All sides open

WIDTH (cm)

PROJECTION (cm)	450	500	550	600	650	700	750	800	850	900	950	1000	1050	1100	1150	1200	1250	1300
400	11	11	10	10	9	9	9	9	8	8	11	11	10	10	10	10	9	9
450	11	10	10	10	9	9	9	9	8	8	11	10	10	10	10	10	9	9
500	10	10	10	10	9	9	9	9	8	8	10	10	10	10	10	10	9	9
550	10	10	10	10	9	9	9	9	8	8	10	10	10	10	10	10	9	9
600	10	9	9	9	9	9	9	9	8	8	10	9	9	9	9	9	9	9
650	9	9	9	9	9	9	9	8	8	8	9	9	9	9	9	9	9	9
700	9	9	9	9	9	9	9	8	8	8	9	9	9	9	9	9	9	9
750	9	9	9	9	8	8	8	8	8	8	9	9	9	9	9	9	8	
800	8	8	8	8	8	8	8	8	8	8	8	8	8	8	8	8		
850	8	8	8	8	8	8	8	8	8	8	8	8	8	8	8			
900	8	8	8	8	8	8	8	8	8	8	8	8	8	8				
950	8	8	8	8	8	8	8	8	8	8	8	8	8					
1000	8	8	8	8	7	7	7	7	7	7	8	8						

With side enclosure

*The values are given according to the Beaufort scale.

**Calculated for Products with a front height of 250 cm according to Eurocode EN 1991-1-4 Terrain Category 4.

*** You can ask for new calculations for special designs

SILVER PLUS Wall / Ceiling

Width

Projection

	2 RAILS					3 RAILS									4 RAILS								FS4	FS9	FS9-S
	250 cm	300 cm	350 cm	400 cm	450 cm	500 cm	550 cm	600 cm	650 cm	700 cm	750 cm	800 cm	850 cm	900 cm	950 cm	1000 cm	1050 cm	1100 cm	1150 cm	1200 cm	1250 cm	1300 cm			
200 cm	€ 4.428	€ 4.644	€ 4.947	€ 5.255	€ 5.472	€ 6.427	€ 6.638	€ 6.850	€ 7.249	€ 7.427	€ 7.573	€ 7.782	€ 7.992	€ 8.202	€ 9.255	€ 9.462	€ 9.670	€ 9.879	€ 10.089	€ 10.251	€ 10.530	€ 10.853	€ 734	€ 150	€ 199
250 cm	€ 4.622	€ 4.954	€ 5.250	€ 5.474	€ 5.694	€ 6.742	€ 7.076	€ 7.292	€ 7.586	€ 7.771	€ 7.926	€ 8.256	€ 8.588	€ 8.689	€ 9.709	€ 9.923	€ 10.253	€ 10.468	€ 10.685	€ 10.852	€ 11.140	€ 11.470	€ 811	€ 181	€ 249
300 cm	€ 4.963	€ 5.334	€ 5.667	€ 5.929	€ 6.190	€ 7.373	€ 7.746	€ 8.004	€ 8.336	€ 8.557	€ 8.752	€ 9.121	€ 9.494	€ 9.636	€ 10.764	€ 11.019	€ 11.390	€ 11.642	€ 11.900	€ 12.100	€ 12.428	€ 12.795	€ 887	€ 212	€ 299
350 cm	€ 5.273	€ 5.542	€ 5.883	€ 6.261	€ 6.528	€ 7.810	€ 8.078	€ 8.457	€ 8.800	€ 9.023	€ 9.227	€ 9.605	€ 9.990	€ 10.134	€ 11.456	€ 11.719	€ 11.983	€ 12.244	€ 12.621	€ 12.829	€ 13.164	€ 13.426	€ 963	€ 243	€ 349
400 cm	€ 5.476	€ 5.751	€ 6.100	€ 6.485	€ 6.760	€ 8.135	€ 8.409	€ 8.795	€ 9.145	€ 9.377	€ 9.588	€ 9.973	€ 10.361	€ 10.518	€ 11.923	€ 12.193	€ 12.465	€ 12.734	€ 13.118	€ 13.332	€ 13.674	€ 13.943	€ 1.040	€ 274	€ 399
450 cm	€ 5.683	€ 5.966	€ 6.323	€ 6.715	€ 6.997	€ 8.469	€ 8.751	€ 9.146	€ 9.502	€ 9.741	€ 9.960	€ 10.352	€ 10.748	€ 10.912	€ 12.401	€ 12.678	€ 12.957	€ 13.235	€ 13.629	€ 13.844	€ 14.195	€ 14.472	€ 1.116	€ 305	€ 449
500 cm	€ 5.886	€ 6.177	€ 6.540	€ 6.940	€ 7.231	€ 8.795	€ 9.084	€ 9.486	€ 9.853	€ 10.095	€ 10.321	€ 10.722	€ 11.127	€ 11.297	€ 12.869	€ 13.155	€ 13.441	€ 13.726	€ 14.126	€ 14.350	€ 14.708	€ 14.993	€ 1.192	€ 336	€ 499
550 cm	€ 6.237	€ 6.674	€ 7.075	€ 7.514	€ 7.841	€ 9.554	€ 9.997	€ 10.324	€ 10.845	€ 11.124	€ 11.390	€ 11.831	€ 12.275	€ 12.600	€ 14.151	€ 14.493	€ 14.934	€ 15.260	€ 15.698	€ 15.954	€ 16.351	€ 16.789	€ 1.269	€ 367	€ 549
600 cm	€ 6.448	€ 6.892	€ 7.303	€ 7.747	€ 8.082	€ 9.889	€ 10.342	€ 10.677	€ 11.204	€ 11.489	€ 11.762	€ 12.211	€ 12.663	€ 12.996	€ 14.648	€ 14.981	€ 15.429	€ 15.762	€ 16.208	€ 16.470	€ 16.874	€ 17.320	€ 1.345	€ 398	€ 598
650 cm	€ 6.653	€ 7.106	€ 7.522	€ 7.974	€ 8.318	€ 10.219	€ 10.679	€ 11.022	€ 11.557	€ 11.799	€ 12.076	€ 12.531	€ 12.985	€ 13.327	€ 15.123	€ 15.465	€ 15.861	€ 16.259	€ 16.713	€ 16.980	€ 17.393	€ 17.846	€ 1.421	€ 429	€ 648
700 cm	€ 6.859	€ 7.319	€ 7.741	€ 8.203	€ 8.553	€ 10.550	€ 11.016	€ 11.369	€ 11.912	€ 12.156	€ 12.444	€ 12.906	€ 13.371	€ 13.716	€ 15.597	€ 15.945	€ 16.408	€ 16.756	€ 17.220	€ 17.490	€ 17.911	€ 18.371	€ 1.497	€ 460	€ 698
750 cm	€ 7.067	€ 7.534	€ 7.964	€ 8.430	€ 8.788	€ 10.881	€ 11.355	€ 11.714	€ 12.266	€ 12.515	€ 12.808	€ 13.278	€ 13.750	€ 14.104	€ 16.073	€ 16.428	€ 16.898	€ 17.254	€ 17.724	€ 18.002	€ 18.429		€ 1.574	€ 491	€ 748
800 cm	€ 7.416	€ 7.923	€ 8.390	€ 8.895	€ 9.292	€ 11.524	€ 12.038	€ 12.436	€ 13.028	€ 13.312	€ 13.645	€ 14.153	€ 14.665	€ 15.061	€ 17.146	€ 17.539	€ 18.050	€ 18.444	€ 18.954	€ 19.266			€ 1.650	€ 522	€ 798
850 cm	€ 7.754	€ 8.270	€ 8.745	€ 9.259	€ 9.663	€ 11.933	€ 12.455	€ 12.860	€ 13.462	€ 13.750	€ 14.090	€ 14.606	€ 15.126	€ 15.529	€ 17.650	€ 18.050	€ 18.569	€ 18.970	€ 19.489				€ 1.726	€ 553	€ 848
900 cm	€ 7.967	€ 8.482	€ 8.957	€ 9.471	€ 9.875	€ 12.145	€ 12.668	€ 13.073	€ 13.674	€ 13.963	€ 14.302	€ 14.819	€ 15.339	€ 15.741	€ 17.862	€ 18.262	€ 18.781	€ 19.182					€ 1.803	€ 584	€ 898
950 cm	€ 8.179	€ 8.694	€ 9.170	€ 9.684	€ 10.087	€ 12.357	€ 12.880	€ 13.285	€ 13.886	€ 14.175	€ 14.514	€ 15.031	€ 15.551	€ 15.954	€ 18.074	€ 18.475	€ 18.993						€ 1.879	€ 615	€ 948
1000 cm	€ 8.391	€ 8.907	€ 9.382	€ 9.896	€ 10.300	€ 12.570	€ 13.092	€ 13.497	€ 14.099	€ 14.387	€ 14.727	€ 15.243	€ 15.763	€ 16.166	€ 18.287	€ 18.687							€ 1.955	€ 646	€ 997

FS3	€ 149	€ 156	€ 170	€ 187	€ 203	€ 218	€ 234	€ 249	€ 265	€ 280	€ 360	€ 376	€ 391	€ 407	€ 423	€ 439	€ 454	€ 470	€ 485	€ 501	€ 516	€ 532
FS5-A	€ 27	€ 35	€ 41	€ 46	€ 54	€ 60	€ 67	€ 73	€ 80	€ 86	€ 93	€ 99	€ 106	€ 112	€ 119	€ 125	€ 132	€ 138	€ 145	€ 151	€ 159	€ 165
FS5-E	€ 38	€ 48	€ 56	€ 64	€ 74	€ 82	€ 92	€ 100	€ 110	€ 118	€ 128	€ 136	€ 146	€ 154	€ 164	€ 172	€ 182	€ 190	€ 200	€ 209	€ 218	€ 227

FS3	Gutter System
FS5-A	Additional Fabric Support Profile (Standard)
FS5-E	Additional Fabric Support Profile (3 Axis)
FS4	Additional Rail for PLUS Series - Al. - 120x150mm
FS8	Lighting System
FS9	Side Beam for PLUS Series - Al. - 50x150mm
FS9-S	Side Beam for PLUS Series - Al. - 100x150mm (Special)

FS8		LED TYPE & MODULE		
		2 LED	3 LED	4 LED
FS8-S	SPOT	€ 125	€ 152	€ 179
FS8-L	LINEAR	€ 179	€ 233	-
FS8-E	3 AXIS	€ 206	€ 268	-

* FS9 Side Beam is not included in the price
* FS Flexy Plain/3D or Stam 6002 is included in the price
* Motor and Remote control is included in the price
* RAL Colours specified in Aluminium coating catalogue are included in price. Any other RAL colours which are existing in our Supplier's stock can be applied without extra cost.
* Standard colours are RAL9010, RAL7040, RAL1013, RAL7046, RAL9004, RAL3022, RAL120-2, RAL7036, RAL8019, RAL120-5, RAL8025, RAL4001, RAL620-3, RAL5008
* Painting cost has to be min. 125€
* Plastic parts coloured only specified colours

DEDUCTIONS

Price deduction can apply only front pillars, back pillars and side beam. The price of the front pillar, back pillar and side beam can be deducted from options price.

OPTIONS

FS10	Extra pillar (100x100mm Al.)	€ 335	pcs
FS10-ST3	Extra pillar (100x100x3mm St.)	€ 401	pcs
FS10-ST5	Extra pillar (100x100x5mm St.)	€ 623	pcs
FS11	Deco ceiling cover	€ 46	m^2
FS12	Izo-Pro ceiling cover (up to 800 cm width)	€ 39	m^2
FS15	Side beam pillar (50x100mm - Al)	€ 174	pcs
FS15-B	Side beam pillar (100x100mm - Al)	€ 335	pcs
FS16	Wood effect (*Price difference for standart patterns (up to 700cm projection) (*Can not be applied to steel construction or freestanding products with base plate.)	10% of product price	
FS19	Fix louver	€ 46	lm
FS23	External Square Downpipe	€ 205	pcs
FS24	W96 Ceiling Cover	€ 53	m^2
FS25	Fabric support profile special color	€ 11	m^2
FS26	Exclusive fabric difference	€ 31	m^2
FS27	3 Axis lighting fabric support profile difference	€ 9	m^2
FS29-1	Sun Sensor (SUNIS) (with Universal Receiver, it's included in the price)	€ 596	pcs
FS29-2	Wind Sensor (EOLIS RTS) (with Universal Receiver, it's included in the price)	€ 367	pcs
FS29-3	Sun and Wind Sensor (SOLIRIS) (with Universal Receiver, it's included in the price)	€ 459	pcs
FS30	CONNEXOON	€246	pcs
FS31-1	Remote Control - PURE - Telis 1	€55	pcs
FS31-4	Remote Control - PURE - Telis 4	€93	pcs
FS31-16	Remote Control - PURE - Telis 16	€264	pcs
FS32-1	Remote Control - PATIO - Telis 1	€76	pcs
FS32-4	Remote Control - PATIO - Telis 4	€123	pcs
FS33-1	Remote Control - LOUNGE - Telis 1	€93	pcs
FS33-4	Remote Control - LOUNGE - Telis 4	€133	pcs
FS34-1	Remote Control - MODULIS PURE - Telis 1	€125	pcs
FS34-4	Remote Control - MODULIS PURE - Telis 4	€192	pcs
FS35-1	Remote Control - MODULIS LOUNGE - Telis 1	€144	pcs
FS35-4	Remote Control - MODULIS LOUNGE - Telis 4	€220	pcs

*** Can't apply a sensor to the single motor product. For further information please contact with PALMIYE**

EXTENSIONS

Rail	PLUS - 120x150mm	€ 209	lm
Beam	Al. 42x150mm	€ 65	lm
Beam	Al. 50x150mm	€ 115	lm
Beam	Al. 100x150mm	€ 96	lm
Beam	St. 100x150x3mm	€ 190	lm
Beam	St. 100x150x5mm	€ 246	lm
Beam	St. 100x200x3mm	€ 193	lm
Beam	St. 100x200x5mm	€ 293	lm
Fabric protection cover	Al. - 63x___cm	€ 37	m^2
Gutter	Special Profile	€ 28	lm
Pillar	Al. 100x100mm	€ 107	lm
Pillar	St. 100x100x3mm	€ 129	lm
Pillar	St. 100x100x5mm	€ 246	lm
Pillar	St. 150x150x3mm	€ 261	lm
Pillar	St. 150x150x5mm	€ 390	lm

Max. Al. front pillar height is 280 cm
Max. St 3mm front pillar height is 380 cm
Max. St 5mm front pillar height is 480 cm

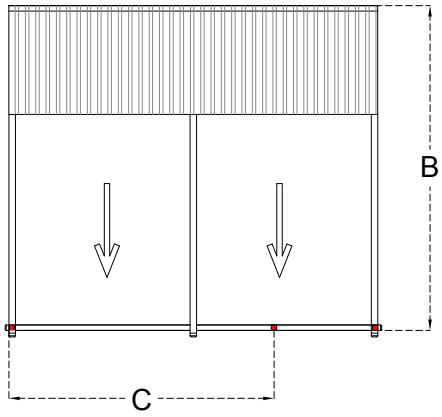

PRICE DIFFERENCE

BEAM GROUP

Back Beam	**Standard**	**Al. 42x150mm**		
	to	Al. 50x150mm	€ 50	lm
		St. 50x150x3mm	€ 62	lm
		St. 50x150x5mm	€ 122	lm
		Al. 100x150mm	€ 30	lm
		St. 100x150x3mm	€ 125	lm
		St. 100x150x5mm	€ 181	lm
		St. 100x200x3mm	€ 128	lm
		St. 100x200x5mm	€ 228	lm
Front Beam	**Standard**	**Al. 100x150mm**		
	to	St. 100x150x3mm	€ 95	lm
		St. 100x150x5mm	€ 151	lm
		St. 100x200x3mm	€ 98	lm
		St. 100x200x5mm	€ 197	lm

PILLAR GROUP

Front Pillar	**Standard**	**Al. 100x100mm**		
	to	St. 100x100x3mm	€ 66	pcs
		St. 100x100x5mm	€ 289	pcs
		St. 150x150x3mm	€ 414	pcs
		St. 150x150x5mm	€ 781	pcs

FRONT PILLAR POSITION CHANGE

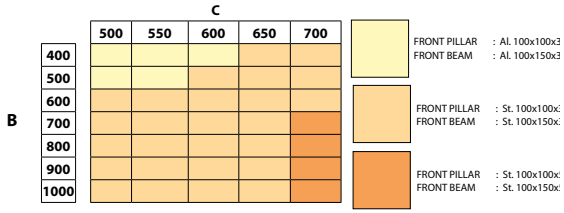

(construction price difference needs to be added)

SILVER

PLUS

Freestanding

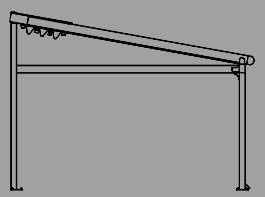

MAXIMUM DIMENSIONS

	WIDTH	PROJECTION
2 RAILS	450 cm	1000 cm
3 RAILS	900 cm	1000 cm
4 RAILS	1300 cm	700 cm

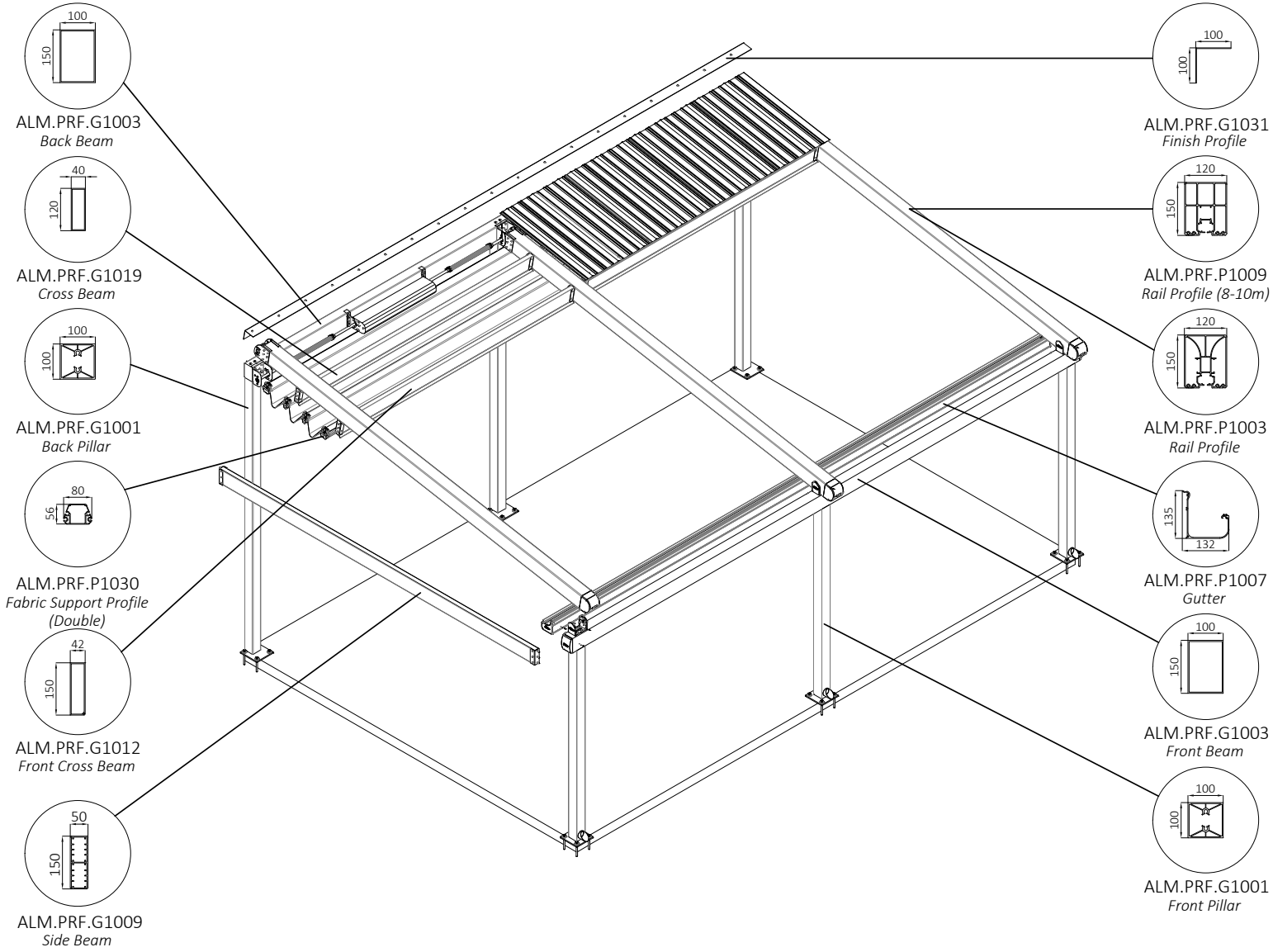

TECHNICAL FEATURES

COLLECTED FABRIC DIMENSIONS

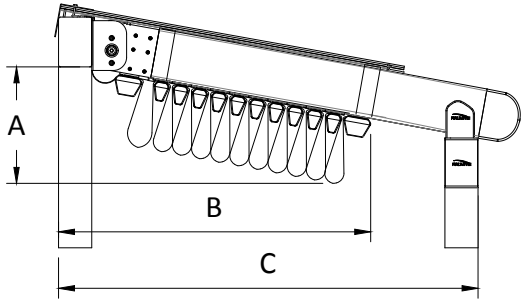

Projection cm

No of Fabric Support Profiles	185	235	284	334	383	433	482	532	581	631	680	729	779	828	878	927	977	C
4	35																	66
5		36																73
6			37															79
7				38														86
8					39													92
9						40												99
10							41											105
11								42										112
12									43									118
13										44								125
15											46							138
16												47						144
17													48					151
18														49				157
19															50			164
20																51		170
21																	51	177

A B

*Calculated according to a slope of 15%

DRAINAGE CALCULATION

Type	Max. m²
Full	39 m²/pc
Half	18 m²/pc

* per drainage

There should be at least one drainage, each 8 m length gutter.

MINIMUM SLOPE CHART

Slope	6,4-7,9%	7,4-8,8%	8,4-9,7%	9,4-10,8%	10,4-12%	11,2-12,7%	12-13,4%	13-14,5%	14-15,7%	15-16,6%	16-17,6%
	Rail Center										
	200	**225**	**250**	**275**	**300**	**325**	**350**	**375**	**400**	**425**	**450**
250	16	19	21	24	26	28	30	33	35	38	40
300	20	23	26	29	31	34	37	40	42	45	48
350	23	27	30	34	37	40	43	46	49	53	56
400	27	31	35	39	42	46	49	53	57	61	64
450	32	36	40	44	48	52	56	60	64	69	73
500	36	41	45	50	54	59	63	68	72	77	81
550	40	45	50	55	60	65	70	75	80	85	90
600	44	50	55	61	66	72	77	83	88	94	99
650	49	55	61	67	72	78	84	90	96	102	108
700	54	60	66	73	79	85	91	98	104	111	117
750	59	66	72	79	85	92	99	106	112	119	126
800	63	70	77	85	92	99	106	114	121	129	136
850	67	75	82	91	99	106	113	122	130	138	146
900	71	79	87	97	106	113	120	130	139	148	156
950	75	84	92	103	113	120	127	138	148	157	166
1000	79	88	97	109	120	127	134	146	157	167	176

Projection

For back height of system 30 cm should be added to slope value.

WIND RESISTANCE

WIDTH (cm)

PROJECTION (cm)	450	500	550	600	650	700	750	800	850	900	950	1000	1050	1100	1150	1200	1250	1300
400	11	11	11	11	11	10	10	10	10	9	11	11	11	11	11	11	11	11
450	11	11	11	11	10	10	10	9	9	9	11	11	11	11	11	11	10	10
500	11	11	10	10	10	10	9	9	9	8	11	11	10	10	10	10	10	10
550	11	11	10	10	10	9	9	9	8	8	11	11	10	10	10	10	10	10
600	10	10	10	10	9	9	8	8	8	8	10	10	10	10	10	10	9	9
650	10	10	9	9	9	8	8	8	8	8	10	10	9	9	9	9	9	9
700	9	9	9	9	8	8	8	8	8	7	9	9	9	9	9	9	8	8
750	9	9	8	8	8	8	8	7	7	7	9	9	8	8	8	8	8	
800	8	8	8	8	8	7	7	7	7	7	8	8	8	8	8	8		
850	8	8	8	7	7	7	7	7	7	6	8	8	8	8	7			
900	8	8	7	7	7	7	7	6	6	6	8	8	7	7				
950	7	7	7	7	7	7	6	6	6	6	7	7	7					
1000	7	7	7	7	7	6	6	6	6	6	7	7						

All sides open

WIDTH (cm)

PROJECTION (cm)	450	500	550	600	650	700	750	800	850	900	950	1000	1050	1100	1150	1200	1250	1300
400	9	9	9	8	8	8	7	7	7	7	9	9	9	9	8	8	8	8
450	9	9	8	8	8	7	7	7	7	7	9	9	8	8	8	8	8	8
500	9	8	8	8	7	7	7	7	7	7	9	8	8	8	8	8	7	7
550	9	8	8	7	7	7	7	7	7	7	9	8	8	8	7	7	7	7
600	8	8	8	7	7	7	7	7	7	7	8	8	8	8	7	7	7	7
650	8	8	7	7	7	7	7	7	7	7	8	8	7	7	7	7	7	7
700	8	8	7	7	7	7	7	7	7	7	8	8	7	7	7	7	7	7
750	8	7	7	7	7	7	7	7	7	7	8	7	7	7	7	7	7	
800	8	7	7	7	7	7	7	7	7	7	8	7	7	7	7	7		
850	8	7	7	7	7	7	7	7	7	6	8	7	7	7	7			
900	7	7	7	7	7	7	7	6	6	6	7	7	7	7				
950	7	7	7	7	7	7	6	6	6	6	7	7	7					
1000	7	7	7	7	7	6	6	6	6	6	7	7						

With side enclosure

*The values are given according to the Beaufort scale.

**Calculated for Products with a front height of 250 cm according to Eurocode EN 1991-1-4 Terrain Category 4.

*** You can ask for new calculations for special designs.

SILVER PLUS Freestanding

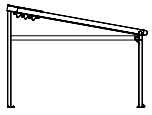

Width

Projection

	2 RAILS					3 RAILS									4 RAILS								FS4	FS9	FS9-S
	250 cm	300 cm	350 cm	400 cm	450 cm	500 cm	550 cm	600 cm	650 cm	700 cm	750 cm	800 cm	850 cm	900 cm	950 cm	1000 cm	1050 cm	1100 cm	1150 cm	1200 cm	1250 cm	1300 cm			
200 cm	€ 5.168	€ 5.398	€ 5.716	€ 6.039	€ 6.270	€ 7.574	€ 7.799	€ 8.025	€ 8.438	€ 8.630	€ 8.791	€ 9.014	€ 9.239	€ 9.463	€ 10.865	€ 11.086	€ 11.309	€ 11.532	€ 11.756	€ 11.933	€ 12.226	€ 12.563	€ 734	€ 150	€ 199
250 cm	€ 5.363	€ 5.708	€ 6.018	€ 6.257	€ 6.492	€ 7.889	€ 8.237	€ 8.467	€ 8.776	€ 8.975	€ 9.144	€ 9.489	€ 9.835	€ 9.950	€ 11.318	€ 11.547	€ 11.892	€ 12.121	€ 12.352	€ 12.533	€ 12.836	€ 13.180	€ 811	€ 181	€ 249
300 cm	€ 5.704	€ 6.089	€ 6.436	€ 6.712	€ 6.988	€ 8.519	€ 8.907	€ 9.179	€ 9.526	€ 9.761	€ 9.970	€ 10.353	€ 10.741	€ 10.897	€ 12.373	€ 12.643	€ 13.028	€ 13.295	€ 13.567	€ 13.782	€ 14.124	€ 14.506	€ 887	€ 212	€ 299
350 cm	€ 6.014	€ 6.296	€ 6.652	€ 7.044	€ 7.325	€ 8.957	€ 9.238	€ 9.632	€ 9.989	€ 10.227	€ 10.445	€ 10.837	€ 11.237	€ 11.395	€ 13.066	€ 13.343	€ 13.622	€ 13.897	€ 14.288	€ 14.510	€ 14.860	€ 15.136	€ 963	€ 243	€ 349
400 cm	€ 6.216	€ 6.506	€ 6.869	€ 7.268	€ 7.558	€ 9.281	€ 9.570	€ 9.970	€ 10.334	€ 10.581	€ 10.806	€ 11.206	€ 11.608	€ 11.779	€ 13.532	€ 13.817	€ 14.104	€ 14.387	€ 14.786	€ 15.013	€ 15.370	€ 15.654	€ 1.040	€ 274	€ 399
450 cm	€ 6.424	€ 6.721	€ 7.092	€ 7.498	€ 7.795	€ 9.615	€ 9.912	€ 10.321	€ 10.692	€ 10.944	€ 11.178	€ 11.585	€ 11.995	€ 12.173	€ 14.010	€ 14.303	€ 14.596	€ 14.888	€ 15.296	€ 15.526	€ 15.891	€ 16.182	€ 1.116	€ 305	€ 449
500 cm	€ 6.626	€ 6.932	€ 7.309	€ 7.723	€ 8.029	€ 9.942	€ 10.244	€ 10.661	€ 11.042	€ 11.299	€ 11.539	€ 11.954	€ 12.374	€ 13.148	€ 14.479	€ 14.779	€ 15.080	€ 15.379	€ 15.793	€ 16.032	€ 16.404	€ 17.512	€ 1.192	€ 336	€ 499
550 cm	€ 6.977	€ 7.429	€ 7.844	€ 8.297	€ 8.639	€ 10.700	€ 11.158	€ 11.499	€ 12.034	€ 12.327	€ 12.608	€ 13.063	€ 14.085	€ 14.451	€ 15.761	€ 16.117	€ 16.573	€ 16.913	€ 17.366	€ 17.635	€ 18.829	€ 19.309	€ 1.269	€ 367	€ 549
600 cm	€ 7.188	€ 7.647	€ 8.072	€ 8.531	€ 8.880	€ 11.035	€ 11.502	€ 11.852	€ 12.393	€ 12.692	€ 12.980	€ 13.444	€ 14.473	€ 14.847	€ 16.258	€ 16.605	€ 17.067	€ 17.414	€ 17.875	€ 18.151	€ 19.352	€ 19.840	€ 1.345	**€ 398**	**€ 598**
650 cm	€ 7.393	€ 7.860	€ 8.291	€ 8.757	€ 9.116	€ 11.365	€ 11.840	€ 12.197	€ 12.746	€ 13.002	€ 13.294	€ 14.299	€ 14.795	€ 15.179	€ 16.732	€ 17.089	€ 17.499	€ 17.912	€ 19.108	€ 19.416	€ 19.871	€ 20.365	€ 1.421	**€ 429**	**€ 648**
700 cm	€ 7.599	€ 8.074	€ 8.510	€ 8.986	€ 9.351	€ 11.697	€ 12.177	€ 12.544	€ 13.101	€ 13.360	€ 13.662	€ 14.674	€ 15.181	€ 15.567	€ 17.207	€ 17.569	€ 18.046	€ 18.409	€ 19.614	€ 19.927	€ 20.389	€ 20.891	€ 1.497	**€ 460**	**€ 698**
750 cm	€ 7.807	€ 8.289	€ 8.733	€ 9.214	€ 9.586	€ 12.027	€ 12.516	€ 12.889	€ 13.455	€ 13.719	€ 14.535	€ 15.046	€ 15.560	€ 16.222	€ 17.683	€ 18.052	€ 18.536	€ 19.607	€ 20.119	€ 20.438	€ 20.907		€ 1.574	**€ 491**	**€ 748**
800 cm	€ 8.156	€ 8.677	€ 9.159	€ 9.679	€ 10.090	€ 12.671	€ 13.199	€ 13.611	€ 15.029	€ 15.855	€ 16.278	€ 16.875	€ 17.475	€ 18.226	€ 19.917	€ 21.017	€ 21.616	€ 22.100	€ 22.699	€ 23.099			€ 1.650	**€ 522**	**€ 798**
850 cm	€ 8.495	€ 9.024	€ 9.514	€ 10.042	€ 10.460	€ 13.079	€ 13.616	€ 14.035	€ 15.917	€ 16.294	€ 16.722	€ 17.328	€ 18.194	€ 18.694	€ 21.039	€ 21.527	€ 22.135	€ 22.625	€ 23.233				€ 1.726	**€ 553**	**€ 848**
900 cm	€ 8.707	€ 9.652	€ 10.189	€ 10.765	€ 11.230	€ 13.962	€ 14.546	€ 15.439	€ 16.129	€ 16.506	€ 16.935	€ 17.540	€ 18.407	€ 18.906	€ 21.251	€ 21.740	€ 22.348	€ 22.838					€ 1.803	**€ 584**	**€ 898**
950 cm	€ 8.919	€ 9.865	€ 10.401	€ 10.977	€ 11.442	€ 14.174	€ 14.758	€ 15.651	€ 16.341	€ 16.719	€ 17.147	€ 17.752	€ 18.619	€ 19.119	€ 21.463	€ 21.952	€ 22.560						€ 1.879	**€ 615**	**€ 948**
1000 cm	€ 9.132	€ 10.077	€ 10.614	€ 11.189	€ 11.655	€ 14.387	€ 15.370	€ 15.863	€ 18.103	€ 18.509	€ 18.967	€ 19.602	€ 20.497	€ 21.026	€ 23.790	€ 24.308							€ 1.955	**€ 646**	**€ 997**

*For Freestanding products has to add "SIDE BEAM" bigger than 599cm projection

FS3	€ 149	€ 156	€ 170	€ 187	€ 203	€ 218	€ 234	€ 249	€ 265	€ 280	€ 360	€ 376	€ 391	€ 407	€ 423	€ 439	€ 454	€ 470	€ 485	€ 501	€ 516	€ 532
FS5-A	€ 27	€ 35	€ 41	€ 46	€ 54	€ 60	€ 67	€ 73	€ 80	€ 86	€ 93	€ 99	€ 106	€ 112	€ 119	€ 125	€ 132	€ 138	€ 145	€ 151	€ 159	€ 165
FS5-E	€ 38	€ 48	€ 56	€ 64	€ 74	€ 82	€ 92	€ 100	€ 110	€ 118	€ 128	€ 136	€ 146	€ 154	€ 164	€ 172	€ 182	€ 190	€ 200	€ 209	€ 218	€ 227

FS3	Gutter&Downpipe
FS4	Additional Rail (PLUS - 120x150mm Al.)
FS5-A	Additional Standard Fabric Support Profile
FS5-E	Additional 3 Axis Fabric Support Profile
FS9-S	Side Beam (100x150mm - Special)
FS9	Side Beam (50x150mm Al)

FS8	
FS8-S	SPOT
FS8-L	LINEAR
FS8-E	3 AXIS

LED TYPE & MODULE		
2 LED	3 LED	4 LED
€ 125	€ 152	€ 179
€ 179	€ 233	-
€ 206	€ 268	-

* FS9 Side Beam is not included in the price
* FS Flexy Plain/3D or Stam 6002 is included in the price
* Motor and Remote control is included in the price
* RAL Colours specified in Aluminium coating catalogue are included in price. Any other RAL colours which are existing in our Supplier's stock can be applied without extra cost.
* Standard colours are RAL9010, RAL7040, RAL1013, RAL7046, RAL9004, RAL3022, RAL120-2, RAL7036, RAL8019, RAL120-5, RAL8025, RAL4001, RAL620-3, RAL5008
* Painting cost has to be min. 125€
* Plastic parts coloured only specified colours

DEDUCTIONS

Price deduction can apply only front pillars, back pillars and side beam. The price of the front pillar, back pillar and side beam can be deducted from options price.

OPTIONS

FS10	Extra pillar (100x100mm Al.)	€ 335	pcs
FS10-ST3	Extra pillar (100x100x3mm St.)	€ 401	pcs
FS10-ST5	Extra pillar (100x100x5mm St.)	€ 623	pcs
FS11	Deco ceiling cover	€ 46	m^2
FS12	Izo-Pro ceiling cover (up to 800 cm width)	€ 39	m^2
FS15	Side beam pillar (50x100mm - Al)	€ 174	pcs
FS15-B	Side beam pillar (100x100mm - Al)	€ 335	pcs
FS16	"Wood effect (*Price difference for standart patterns (up to 700cm projection) (*Can not be applied to steel construction or freestanding prod-ucts with base plate.)"	10% of product price	
FS19	Fix louver	€ 46	lm
FS23	External Square Downpipe	€ 205	pcs
FS24	W96 Ceiling Cover	€ 53	m^2
FS25	Fabric support profile special color	€ 11	m^2
FS26	Exclusive fabric difference	€ 31	m^2
FS27	3 Axis lighting fabric support profile difference	€ 9	m^2
FS29-1	Sun Sensor (SUNIS) (with Universal Receiver, it's included in the price)	€ 596	pcs
FS29-2	Wind Sensor (EOLIS RTS) (with Universal Receiver, it's included in the price)	€ 367	pcs
FS29-3	Sun and Wind Sensor (SOLIRIS) (with Universal Receiver, it's included in the price)	€ 459	pcs
FS30	CONNEXOON	€246	pcs
FS31-1	Remote Control - PURE - Telis 1	€55	pcs
FS31-4	Remote Control - PURE - Telis 4	€93	pcs
FS31-16	Remote Control - PURE - Telis 16	€264	pcs
FS32-1	Remote Control - PATIO - Telis 1	€76	pcs
FS32-4	Remote Control - PATIO - Telis 4	€123	pcs
FS33-1	Remote Control - LOUNGE - Telis 1	€93	pcs
FS33-4	Remote Control - LOUNGE - Telis 4	€133	pcs
FS34-1	Remote Control - MODULIS PURE - Telis 1	€125	pcs
FS34-4	Remote Control - MODULIS PURE - Telis 4	€192	pcs
FS35-1	Remote Control - MODULIS LOUNGE - Telis 1	€144	pcs
FS35-4	Remote Control - MODULIS LOUNGE - Telis 4	€220	pcs

*** Can't apply a sensor to the single motor product. For further information please contact with PALMIYE**

BACK PILLAR POSITION CHANGE

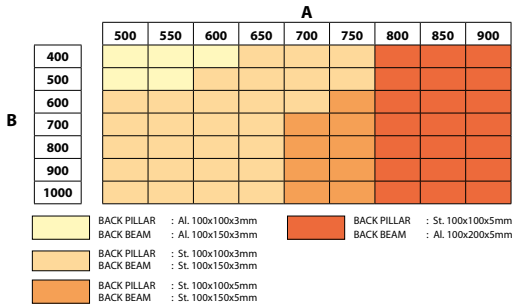

(construction price difference needs to be added)

FRONT PILLAR POSITION CHANGE

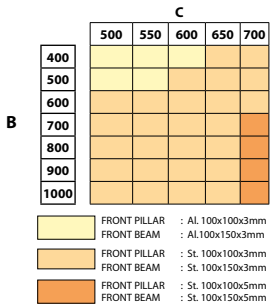

(construction price difference needs to be added)

STANDARD CONSTRUCTION

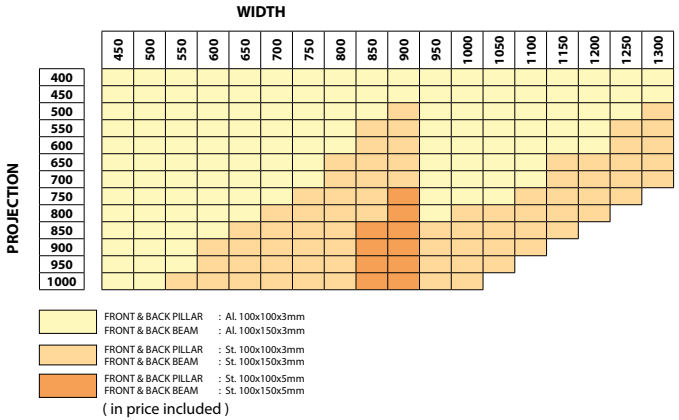

(in price included)

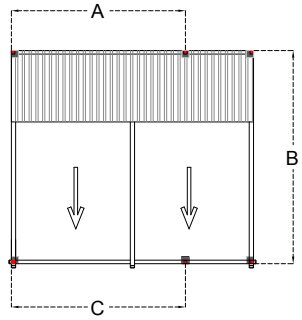

EXTENSIONS

Rail	PLUS - 120x150mm	€ 209	lm
Beam	Al. 100x150mm	€ 96	lm
Beam	St. 100x150x3mm	€ 190	lm
Beam	St. 100x150x5mm	€ 246	lm
Beam	St. 100x200x3mm	€ 193	lm
Beam	St. 100x200x5mm	€ 293	lm
Fabric protection cover	Al. - 63x___cm	€ 37	m^2
Gutter	Special Profile	€ 28	lm
Pillar	Al. 100x100mm	€ 107	lm
Pillar	St. 100x100x3mm	€ 129	lm
Pillar	St. 100x100x5mm	€ 246	lm
Pillar	St. 150x150x3mm	€ 261	lm
Pillar	St. 150x150x5mm	€ 390	lm

Max. Al. front pillar height is 280 cm
Max. St 3mm front pillar height is 380 cm
Max. St 5mm front pillar height is 480 cm

PRICE DIFFERENCE

	BEAM GROUP			
	Standard	**Al. 100x150mm**		
Beam	to	St. 100x150x3mm	€ 95	lm
		St. 100x150x5mm	€ 151	lm
		St. 100x200x3mm	€ 98	lm
		St. 100x200x5mm	€ 197	lm
	PILLAR GROUP			
	Standard	**Al. 100x100mm**		
Pillar	to	St. 100x100x3mm	€ 66	pcs
		St. 100x100x5mm	€ 289	pcs
		St. 150x150x3mm	€ 414	pcs
		St. 150x150x5mm	€ 781	pcs

SILVER

COMPACT
Wall / Ceiling

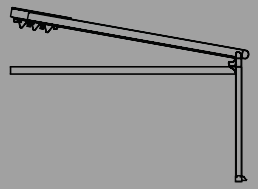

MAXIMUM DIMENSIONS

	WIDTH	PROJECTION
2 RAILS	450 cm	600 cm
3 RAILS	900 cm	600 cm
4 RAILS	1300 cm	600 cm

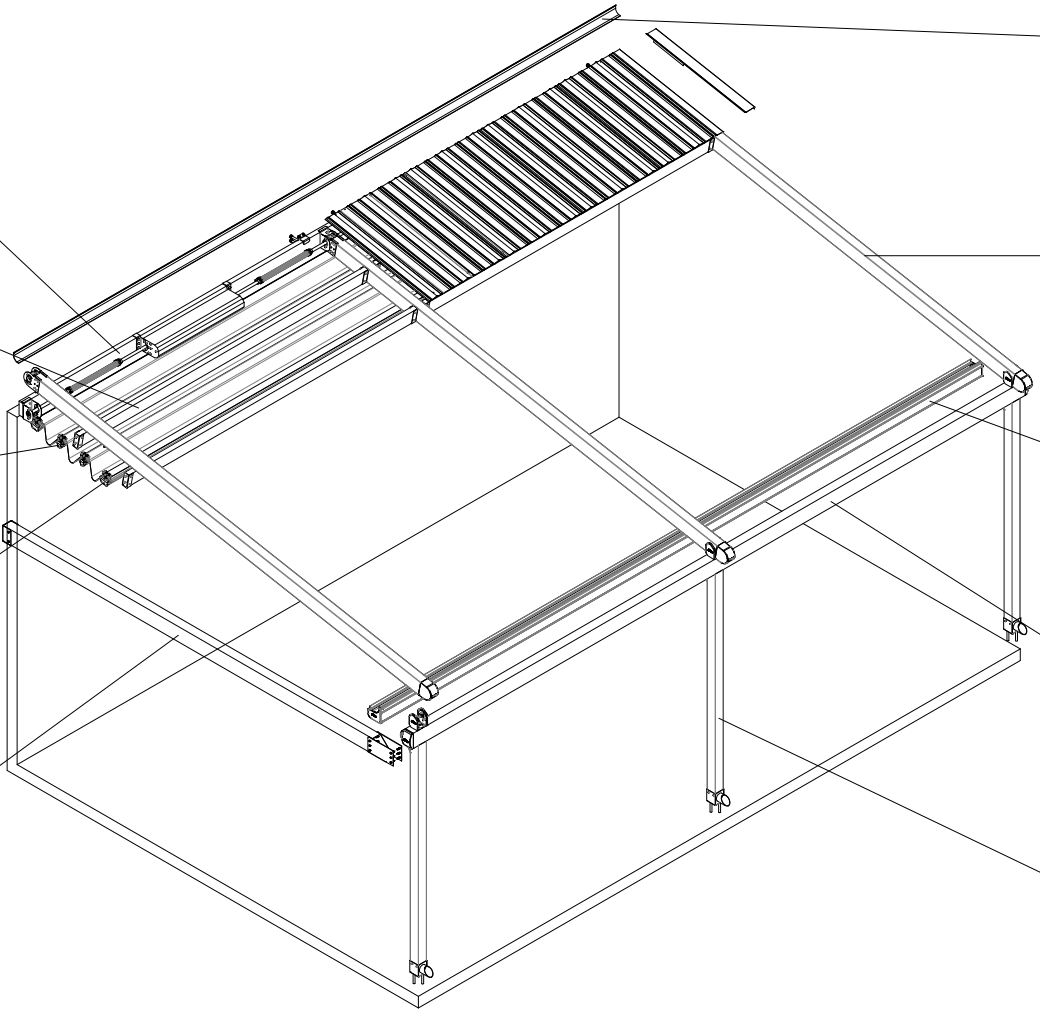

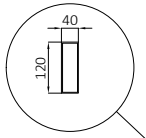

ALM.PRF.G1019
Back Beam

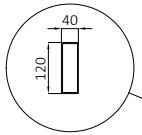

ALM.PRF.G1019
Cross Beam

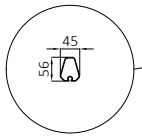

ALM.PRF.P1026
Fabric Support Profile (Single)

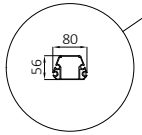

ALM.PRF.P1030
Fabric Support Profile (Double)

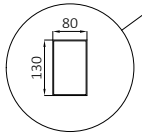

ALM.PRF.P1017
Side Beam

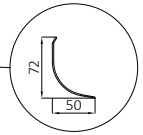

ALM.PRF.G1011
Wall Finish

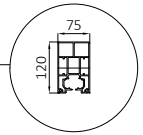

ALM.PRF.P1018
Rail Profile

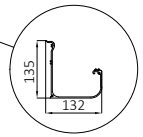

ALM.PRF.P1007
Gutter

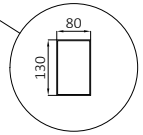

ALM.PRF.P1017
Front Beam

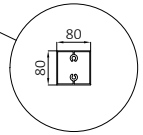

ALM.PRF.P1016
Front Pillar

TECHNICAL FEATURES

COLLECTED FABRIC DIMENSIONS

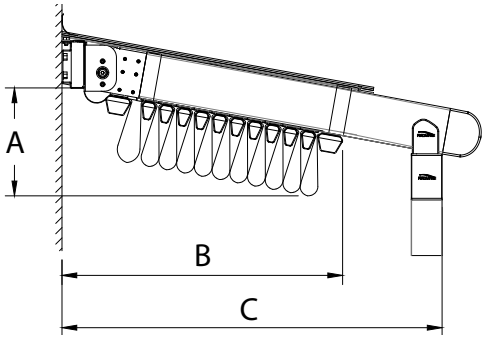

Projection cm

No of Fabric Support Profiles	185	235	284	334	383	433	482	532	581	C
4	34									61
5		35								68
6			36							74
7				37						81
8					38					87
9						39				94
10							40			100
11								41		107
13									43	120
				A						B

*Calculated according to a slope of 15%

DRAINAGE CALCULATION

Type	Max. m²
COMPACT	30 m²/pc

* per drainage

There should be at least one drainage, each 8 m length gutter.

MINIMUM SLOPE CHART

Slope	6,4-7,9%	7,4-8,8%	8,4-9,7%	9,4-10,8%	10,4-12%	11,2-12,7%	12-13,4%	13-14,5%	14-15,7%	15-16,6%	16-17,6%
Rail Center											
	200	**225**	**250**	**275**	**300**	**325**	**350**	**375**	**400**	**425**	**450**
Projection **250**	11	14	16	19	21	23	25	28	30	33	35
300	15	18	21	24	26	29	32	35	37	40	43
350	18	22	25	29	32	35	38	41	44	48	51
400	22	26	30	34	37	41	44	48	52	56	59
450	27	31	35	39	43	47	51	55	59	64	68
500	31	36	40	45	49	54	58	63	67	72	76
550	35	40	45	50	55	60	65	70	75	80	85
600	39	45	50	56	61	67	72	78	83	89	94

*Note: Max. slope can be up to 25%

For back height of system 25 cm should be added to slope value.

WIND RESISTANCE

WIDTH (cm)

PROJECTION (cm)	450	500	550	600	650	700	750	800	850	900	950	1000	1050	1100	1150	1200	1250	1300
400	11	11	11	11	10	10	10	10	10	10	11	11	11	11	11	11	10	10
450	11	11	10	10	10	9	9	9	9	9	11	11	10	10	10	10	10	10
500	10	10	9	9	9	9	9	8	8	8	10	10	9	9	9	9	9	9
550	9	9	9	9	8	8	8	8	8	7	9	9	9	9	9	9	8	8
600	9	9	8	8	8	8	7	7	7	6	9	9	8	8	8	8	8	8

All sides open

WIDTH (cm)

PROJECTION (cm)	450	500	550	600	650	700	750	800	850	900	950	1000	1050	1100	1150	1200	1250	1300
400	9	9	9	9	9	9	9	8	8	8	9	9	9	9	9	9	9	9
450	9	9	8	8	8	8	8	8	8	7	9	9	8	8	8	8	8	8
500	8	8	8	8	8	8	7	7	7	7	8	8	8	8	8	8	8	8
550	8	8	7	7	7	7	7	7	7	7	8	8	7	7	7	7	7	7
600	7	7	7	7	7	6	6	6	6	6	7	7	7	7	7	7	7	7

With side enclosure

*The values are given according to the Beaufort scale.

**Calculated for Products with a front height of 250 cm according to Eurocode EN 1991-1-4 Terrain Category 4.

*** You can ask for new calculations for special designs.

SILVER

COMPACT Wall / Ceiling

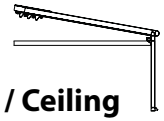

Width

Projection

	2 RAILS					3 RAILS									4 RAILS								FS4 FS10-C	FS9-C
	250 cm	300 cm	350 cm	400 cm	450 cm	500 cm	550 cm	600 cm	650 cm	700 cm	750 cm	800 cm	850 cm	900 cm	950 cm	1000 cm	1050 cm	1100 cm	1150 cm	1200 cm	1250 cm	1300 cm		
200 cm	€ 3.587	€ 3.762	€ 4.006	€ 4.254	€ 4.428	€ 5.199	€ 5.369	€ 5.538	€ 5.859	€ 6.001	€ 6.117	€ 6.284	€ 6.451	€ 6.618	€ 7.467	€ 7.630	€ 7.796	€ 7.963	€ 8.129	€ 8.258	€ 8.479	€ 8.737	€ 852	€ 124
250 cm	€ 3.741	€ 4.008	€ 4.247	€ 4.427	€ 4.603	€ 5.449	€ 5.717	€ 5.890	€ 6.126	€ 6.272	€ 6.396	€ 6.660	€ 6.926	€ 7.006	€ 7.825	€ 7.995	€ 8.259	€ 8.429	€ 8.601	€ 8.732	€ 8.962	€ 9.223	€ 915	€ 149
300 cm	€ 4.013	€ 4.312	€ 4.579	€ 4.790	€ 4.999	€ 5.953	€ 6.252	€ 6.458	€ 6.724	€ 6.901	€ 7.056	€ 7.350	€ 7.648	€ 7.760	€ 8.667	€ 8.869	€ 9.165	€ 9.365	€ 9.569	€ 9.728	€ 9.988	€ 10.280	€ 978	€ 175
350 cm	€ 4.260	€ 4.476	€ 4.749	€ 5.053	€ 5.267	€ 6.300	€ 6.513	€ 6.817	€ 7.092	€ 7.269	€ 7.431	€ 7.733	€ 8.041	€ 8.154	€ 9.215	€ 9.422	€ 9.632	€ 9.840	€ 10.139	€ 10.302	€ 10.568	€ 10.776	€ 1.041	€ 200
400 cm	€ 4.420	€ 4.640	€ 4.919	€ 5.228	€ 5.449	€ 6.555	€ 6.774	€ 7.083	€ 7.362	€ 7.547	€ 7.714	€ 8.022	€ 8.330	€ 8.454	€ 9.581	€ 9.794	€ 10.010	€ 10.224	€ 10.528	€ 10.696	€ 10.968	€ 11.180	€ 1.103	€ 227
450 cm	€ 4.582	€ 4.808	€ 5.095	€ 5.409	€ 5.635	€ 6.817	€ 7.043	€ 7.357	€ 7.642	€ 7.832	€ 8.006	€ 8.318	€ 8.633	€ 8.762	€ 9.954	€ 10.175	€ 10.395	€ 10.615	€ 10.927	€ 11.096	€ 11.374	€ 11.592	€ 1.167	€ 252
500 cm	€ 4.742	€ 4.974	€ 5.264	€ 5.585	€ 5.817	€ 7.074	€ 7.303	€ 7.623	€ 7.917	€ 8.109	€ 8.287	€ 8.607	€ 8.929	€ 9.062	€ 10.320	€ 10.547	€ 10.773	€ 10.997	€ 11.315	€ 11.490	€ 11.772	€ 11.998	€ 1.230	€ 278
550 cm	€ 5.018	€ 5.369	€ 5.689	€ 6.040	€ 6.302	€ 7.676	€ 8.029	€ 8.289	€ 8.705	€ 8.925	€ 9.136	€ 9.487	€ 9.841	€ 10.097	€ 11.337	€ 11.608	€ 11.957	€ 12.213	€ 12.562	€ 12.761	€ 13.074	€ 13.421	€ 1.293	€ 303
600 cm	€ 5.183	€ 5.539	€ 5.867	€ 6.222	€ 6.489	€ 7.937	€ 8.298	€ 8.564	€ 8.984	€ 9.209	€ 9.425	€ 9.782	€ 10.141	€ 10.405	€ 11.723	€ 11.986	€ 12.341	€ 12.603	€ 12.955	€ 13.161	€ 13.480	€ 13.831	€ 1.356	€ 329

FS3	€ 149	€ 156	€ 170	€ 187	€ 203	€ 218	€ 234	€ 249	€ 265	€ 280	€ 360	€ 376	€ 391	€ 407	€ 423	€ 439	€ 454	€ 470	€ 485	€ 501	€ 516	€ 532
FS5-A	€ 27	€ 35	€ 41	€ 46	€ 54	€ 60	€ 67	€ 73	€ 80	€ 86	€ 93	€ 99	€ 106	€ 112	€ 119	€ 125	€ 132	€ 138	€ 145	€ 151	€ 159	€ 165
FS5-E	€ 38	€ 48	€ 56	€ 64	€ 74	€ 82	€ 92	€ 100	€ 110	€ 118	€ 128	€ 136	€ 146	€ 154	€ 164	€ 172	€ 182	€ 190	€ 200	€ 209	€ 218	€ 227

Note: If you use an additional rail you have to add a front pillar. It's included in the price.

FS3	Gutter&Downpipe
FS5-A	Additional Fabric Support Profile (Standard)
FS5-E	Additional Fabric Support Profile (3 Axis)
FS4 FS10-C	Additional Rail for COMPACT Series - Al. - 75x120mm Additional Pillar for COMPACT Series - Al. - 80x80mm
FS8	Lighting System
FS9-C	Side Beam for COMPACT Series - Al. - 80x130mm

FS8	
FS8-S	SPOT
FS8-L	LINEAR
FS8-E	3 AXIS

LED TYPE & MODULE		
2 LED	3 LED	4 LED
€ 125	€ 152	€ 179
€ 179	€ 233	-
€ 206	€ 268	-

* FS9 Side Beam is not included in the price
* FS Flexy Plain/3D or Stam 6002 is included in the price
* Motor and Remote control is included in the price
* RAL Colours specified in Aluminium coating catalogue are included in price. Any other RAL colours which are existing in our Supplier's stock can be applied without extra cost.
* Standard colours are RAL9010, RAL7040, RAL1013, RAL7046, RAL9004, RAL3022, RAL120-2, RAL7036, RAL8019, RAL120-5, RAL8025, RAL4001, RAL620-3, RAL5008
* Painting cost has to be min. 125€
* Plastic parts coloured only specified colours

OPTIONS

FS10-C	Extra pillar (80x80mm Al.)	€ 246	pcs
FS10	Extra pillar (100x100mm Al.)	€ 335	pcs
FS10-ST3	Extra pillar (100x100x3mm St.)	€ 401	pcs
FS10-ST5	Extra pillar (100x100x5mm St.)	€ 623	pcs
FS11	Deco ceiling cover	€ 46	m^2
FS12	Izo-Pro ceiling cover (up to 800 cm width)	€ 39	m^2
FS15-C	Side beam pillar (80x80mm - Al)	€ 246	pcs
FS16	"Wood effect (*Price difference for standart patterns (up to 700cm projection) (*Can not be applied to steel construction or freestanding products with base plate.)"	"10% of product price"	
FS19	Fix louver	€ 46	lm
FS24	W96 Ceiling Cover	€ 53	m^2
FS25	Fabric support profile special color	€ 11	m^2
FS26	Exclusive fabric difference	€ 31	m^2
FS27	3 Axis lighting fabric support profile difference	€ 9	m^2
FS29-1	Sun Sensor (SUNIS) (with Universal Receiver, it's included in the price)	€ 596	pcs
FS29-2	Wind Sensor (EOLIS RTS) (with Universal Receiver, it's included in the price)	€ 367	pcs
FS29-3	Sun and Wind Sensor (SOLIRIS) (with Universal Receiver, it's included in the price)	€ 459	pcs
FS30	CONNEXOON	€246	pcs
FS31-1	Remote Control - PURE - Telis 1	€55	pcs
FS31-4	Remote Control - PURE - Telis 4	€93	pcs
FS31-16	Remote Control - PURE - Telis 16	€264	pcs
FS32-1	Remote Control - PATIO - Telis 1	€76	pcs
FS32-4	Remote Control - PATIO - Telis 4	€123	pcs
FS33-1	Remote Control - LOUNGE - Telis 1	€93	pcs
FS33-4	Remote Control - LOUNGE - Telis 4	€133	pcs
FS34-1	Remote Control - MODULIS PURE - Telis 1	€125	pcs
FS34-4	Remote Control - MODULIS PURE - Telis 4	€192	pcs
FS35-1	Remote Control - MODULIS LOUNGE - Telis 1	€144	pcs
FS35-4	Remote Control - MODULIS LOUNGE - Telis 4	€220	pcs

*** Can't apply a sensor to the single motor product. For further information please contact with PALMIYE**

EXTENSIONS

Rail	COMPACT - 75x120mm	€ 128	lm
Beam	Al. 40x120mm	€ 42	lm
Beam	Al. 42x150mm	€ 65	lm
Beam	Al. 50x150mm	€ 115	lm
Beam	Al. 80x130mm	€ 61	lm
Beam	Al. 100x150mm	€ 96	lm
Beam	St. 100x150x3mm	€ 190	lm
Beam	St. 100x150x5mm	€ 246	lm
Beam	St. 100x200x3mm	€ 193	lm
Beam	St. 100x200x5mm	€ 293	lm
Fabric protection cover	Al. - 63x___cm	€ 37	m^2
Gutter	Special Profile	€ 28	lm
Pillar	Al. 80x80mm	€ 56	lm
Pillar	Al. 100x100mm	€ 107	lm
Pillar	St. 100x100x3mm	€ 129	lm
Pillar	St. 100x100x5mm	€ 246	lm
Pillar	St. 150x150x3mm	€ 261	lm
Pillar	St. 150x150x5mm	€ 390	lm

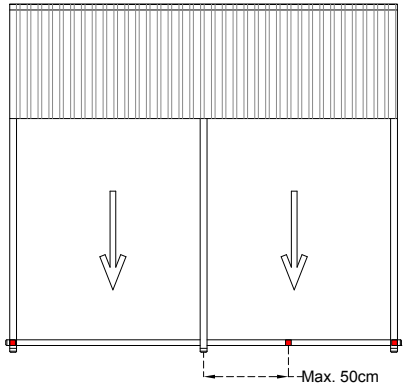

Max. Al. front pillar height is 280 cm
Max. St 3mm front pillar height is 380 cm
Max. St 5mm front pillar height is 480 cm

PRICE DIFFERENCE

BEAM GROUP

Back Beam

Standard	Al. 40x120mm		
to	Al. 42x150mm	€ 24	lm
	Al. 50x150mm	€ 74	lm
	Al. 80x130mm	€ 19	lm
	St. 50x150x3mm	€ 86	lm
	St. 50x150x5mm	€ 146	lm
	Al. 100x150mm	€ 54	lm
	St. 100x150x3mm	€ 149	lm
	St. 100x150x5mm	€ 205	lm
	St. 100x200x3mm	€ 152	lm
	St. 100x200x5mm	€ 251	lm

Front Beam

Standard	Al. 80x130mm		
to	Al. 100x150mm	€ 35	lm
	St. 100x150x3mm	€ 130	lm
	St. 100x150x5mm	€ 186	lm
	St. 100x200x3mm	€ 133	lm
	St. 100x200x5mm	*€ 233*	*lm*

PILLAR GROUP

Front Pillar

Standard	Al. 80x80mm		
to	Al. 100x100mm	€ 88	pcs
	St. 100x100x3mm	€ 155	pcs
	St. 100x100x5mm	€ 377	pcs
	St. 150x150x3mm	€ 502	pcs
	St. 150x150x5mm	€ 870	pcs

DEDUCTIONS
Price deduction can apply only front pillars, back pillars and side beam. The price of the front pillar, back pillar and side beam can be deducted from options price.

SILVER

COMPACT
Freestanding

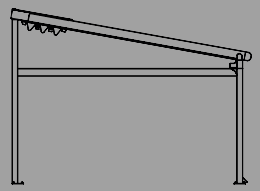

MAXIMUM DIMENSIONS

	WIDTH	PROJECTION
2 RAILS	450 cm	600 cm
3 RAILS	900 cm	600 cm
4 RAILS	1300 cm	600 cm

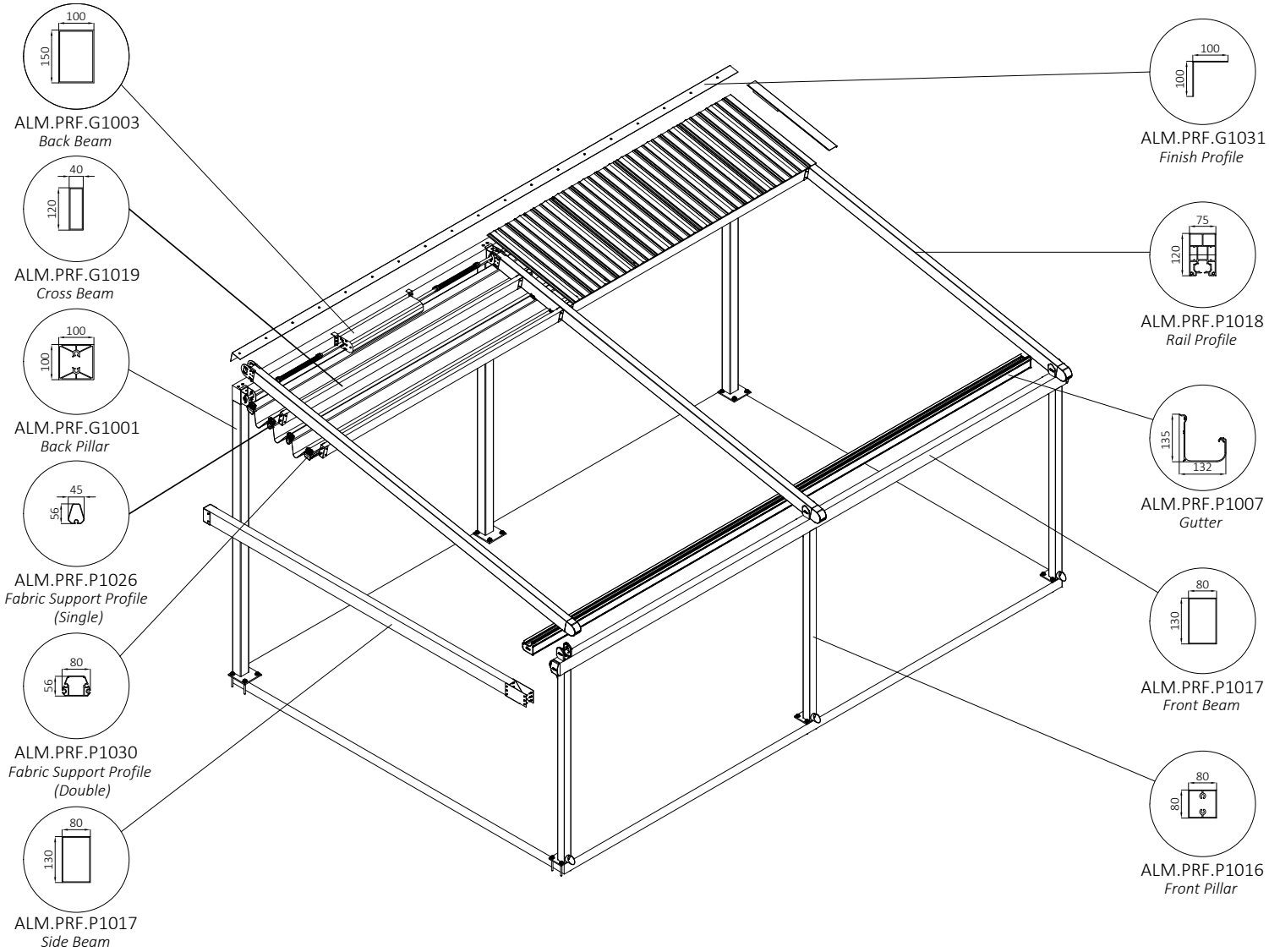

TECHNICAL FEATURES

COLLECTED FABRIC DIMENSIONS

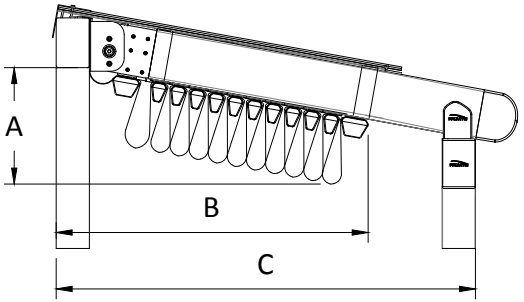

Projection cm

No of Fabric Support Profiles	185	235	284	334	383	433	482	532	581	C
4	35									66
5		36								73
6			37							79
7				38						86
8					39					92
9						40				99
10							41			105
11								42		112
12									43	118

A B

*Calculated according to a slope of 15%

DRAINAGE CALCULATION

Type	Max. m²
COMPACT	30 m²/pc

* per drainage

There should be at least one drainage, each 8 m length gutter.

MINIMUM SLOPE CHART

Slope	6,4-7,9%	7,4-8,8%	8,4-9,7%	9,4-10,8%	10,4-12%	11,2-	12-13,4%	13-14,5%	14-15,7%	15-16,6%	16-17,6%
Rail Center											
	200	**225**	**250**	**275**	**300**	**325**	**350**	**375**	**400**	**425**	**450**
Projection **250**	11	14	16	19	21	23	25	28	30	33	35
300	15	18	21	24	26	29	32	35	37	40	43
350	18	22	25	29	32	35	38	41	44	48	51
400	22	26	30	34	37	41	44	48	52	56	59
450	27	31	35	39	43	47	51	55	59	64	68
500	31	36	40	45	49	54	58	63	67	72	76
550	35	40	45	50	55	60	65	70	75	80	85
600	39	45	50	56	61	67	72	78	83	89	94

*Note: Max. slope can be up to 25%

For back height of system 25 cm should be added to slope value.

WIND RESISTANCE

WIDTH (cm)

PROJECTION (cm)	450	500	550	600	650	700	750	800	850	900	950	1000	1050	1100	1150	1200	1250	1300
400	11	10	10	10	10	10	9	9	9	9	11	10	10	10	10	10	10	10
450	10	9	9	9	9	9	9	9	8	8	10	9	9	9	9	9	9	9
500	10	9	9	9	9	8	8	8	8	8	10	9	9	9	9	9	9	9
550	9	8	8	8	8	8	8	7	7	7	9	8	8	8	8	8	8	8
600	8	8	8	7	7	7	7	7	7	6	8	8	8	8	7	7	7	7

All sides open

WIDTH (cm)

PROJECTION (cm)	450	500	550	600	650	700	750	800	850	900	950	1000	1050	1100	1150	1200	1250	1300
400	8	8	8	7	7	7	6	6	6	6	8	8	8	8	7	7	7	7
450	8	7	7	7	7	7	6	6	6	6	8	7	7	7	7	7	7	7
500	7	7	7	7	7	7	6	6	6	6	7	7	7	7	7	7	7	7
550	7	7	6	6	6	6	6	6	6	6	7	7	6	6	6	6	6	6
600	6	6	6	6	6	6	6	6	5	5	6	6	6	6	6	6	6	6

With side enclosure

*The values are given according to the Beaufort scale.

**Calculated for Products with a front height of 250 cm according to Eurocode EN 1991-1-4 Terrain Category 4.

*** You can ask for new calculations for special designs.

SILVER

COMPACT Freestanding

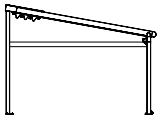

Width

Projection

	2 RAILS					3 RAILS									4 RAILS								FS4 FS10-C	FS9-C
	250 cm	300 cm	350 cm	400 cm	450 cm	500 cm	550 cm	600 cm	650 cm	700 cm	750 cm	800 cm	850 cm	900 cm	950 cm	1000 cm	1050 cm	1100 cm	1150 cm	1200 cm	1250 cm	1300 cm		
200 cm	€ 4.303	€ 4.491	€ 4.750	€ 5.012	€ 5.200	€ 6.308	€ 6.491	€ 6.675	€ 7.010	€ 7.166	€ 7.298	€ 7.479	€ 7.660	€ 7.841	€ 9.026	€ 9.204	€ 9.384	€ 9.565	€ 9.745	€ 9.889	€ 10.125	€ 10.397	€ 852	€ 124
250 cm	€ 4.456	€ 4.738	€ 4.991	€ 5.185	€ 5.376	€ 6.557	€ 6.840	€ 7.027	€ 7.277	€ 7.438	€ 7.577	€ 7.854	€ 8.135	€ 8.229	€ 9.384	€ 9.569	€ 9.847	€ 10.032	€ 10.218	€ 10.363	€ 10.608	€ 10.883	€ 915	€ 149
300 cm	€ 4.728	€ 5.042	€ 5.323	€ 5.549	€ 5.772	€ 7.061	€ 7.375	€ 7.596	€ 7.876	€ 8.067	€ 8.236	€ 8.545	€ 8.857	€ 8.984	€ 10.226	€ 10.443	€ 10.753	€ 10.967	€ 11.186	€ 11.359	€ 11.633	€ 11.939	€ 978	€ 175
350 cm	€ 4.975	€ 5.205	€ 5.492	€ 5.811	€ 6.040	€ 7.408	€ 7.636	€ 7.954	€ 8.243	€ 8.435	€ 8.612	€ 8.928	€ 9.249	€ 9.377	€ 10.774	€ 10.996	€ 11.220	€ 11.442	€ 11.756	€ 11.933	€ 12.214	€ 12.435	€ 1.041	€ 200
400 cm	€ 5.135	€ 5.370	€ 5.663	€ 5.986	€ 6.221	€ 7.663	€ 7.897	€ 8.220	€ 8.514	€ 8.713	€ 8.894	€ 9.216	€ 9.539	€ 9.678	€ 11.140	€ 11.368	€ 11.598	€ 11.826	€ 12.144	€ 12.327	€ 12.613	€ 12.840	€ 1.103	€ 227
450 cm	€ 5.297	€ 5.538	€ 5.838	€ 6.167	€ 6.407	€ 7.926	€ 8.165	€ 8.495	€ 8.794	€ 8.998	€ 9.186	€ 9.513	€ 9.842	€ 9.985	€ 11.513	€ 11.748	€ 11.983	€ 12.217	€ 12.544	€ 12.727	€ 13.020	€ 13.252	€ 1.167	€ 252
500 cm	€ 5.457	€ 5.703	€ 6.008	€ 6.343	€ 6.589	€ 8.182	€ 8.425	€ 8.760	€ 9.068	€ 9.274	€ 9.468	€ 9.801	€ 10.138	€ 10.286	€ 11.879	€ 12.120	€ 12.361	€ 12.600	€ 12.931	€ 13.121	€ 13.418	€ 13.657	€ 1.230	€ 278
550 cm	€ 5.733	€ 6.098	€ 6.433	€ 6.798	€ 7.075	€ 8.784	€ 9.151	€ 9.426	€ 9.856	€ 10.091	€ 10.316	€ 10.681	€ 11.050	€ 11.320	€ 12.896	€ 13.181	€ 13.545	€ 13.816	€ 14.178	€ 14.392	€ 14.720	€ 15.081	€ 1.293	€ 303
600 cm	€ 5.898	€ 6.269	€ 6.611	€ 6.980	€ 7.262	€ 9.045	€ 9.421	€ 9.701	€ 10.135	€ 10.375	€ 10.605	€ 10.977	€ 11.350	€ 11.628	€ 13.283	€ 13.559	€ 13.929	€ 14.206	€ 14.572	€ 14.792	€ 15.125	€ 15.491	€ 1.356	€ 329

FS3	€ 149	€ 156	€ 170	€ 187	€ 203	€ 218	€ 234	€ 249	€ 265	€ 280	€ 360	€ 376	€ 391	€ 407	€ 423	€ 439	€ 454	€ 470	€ 485	€ 501	€ 516	€ 532
FS5-A	€ 26	€ 33	€ 39	€ 45	€ 52	€ 57	€ 64	€ 70	€ 77	€ 83	€ 90	€ 95	€ 102	108 €	115 €	120 €	€ 132	€ 138	€ 145	€ 151	€ 159	€ 165
FS5-E	€ 36	€ 46	€ 54	€ 62	€ 71	€ 79	€ 88	€ 96	€ 106	€ 114	€ 123	€ 131	€ 141	149 €	158 €	166 €	€ 182	€ 190	€ 200	€ 209	€ 218	€ 227

Note: If you use an additional rail you have to add a front pillar. It's included in the price.

FS3	Gutter&Downpipe
FS5-A	Additional Fabric Support Profile (Standard)
FS5-E	Additional Fabric Support Profile (3 Axis)
FS4 FS10-C	Additional Rail for COMPACT Series - Al. - 75x120mm Additional Pillar for COMPACT Series - Al. - 80x80mm
FS8	Lighting System
FS9-C	Side Beam for COMPACT Series - Al. - 80x130mm

FS8	
FS8-S	SPOT
FS8-L	LINEAR
FS8-E	3 AXIS

LED TYPE & MODULE		
2 LED	3 LED	4 LED
€ 125	€ 152	€ 179
€ 179	€ 233	-
€ 206	€ 268	-

* FS9 Side Beam is not included in the price
* FS Flexy Plain/3D or Stam 6002 is included in the price
* Motor and Remote control is included in the price
* RAL Colours specified in Aluminium coating catalogue are included in price. Any other RAL colours which are existing in our Supplier's stock can be applied without extra cost.
* Standard colours are RAL9010, RAL7040, RAL1013, RAL7046, RAL9004, RAL3022, RAL120-2, RAL7036, RAL8019, RAL120-5, RAL8025, RAL4001, RAL620-3, RAL5008
* Painting cost has to be min. 125€
* Plastic parts coloured only specified colours

OPTIONS

-C	Extra pillar (80x80mm Al.)	€ 246	pcs
	Extra pillar (100x100mm Al.)	€ 335	pcs
-	Extra pillar (100x100x3mm St.)	€ 401	pcs
-	Extra pillar (100x100x5mm St.)	€ 623	pcs
	Deco ceiling cover	€ 46	m^2
	Izo-Pro ceiling cover (up to 800 cm width)	€ 39	m^2
-C	Side beam pillar (80x80mm - Al)	€ 246	pcs
	"Wood effect (*Price difference for standart patterns (up to 700cm projection) (*Can not be applied to steel construction or freestanding prod-ucts with base plate.)"	"10% of product price"	
	Fix louver	€ 46	lm
	W96 Ceiling Cover	€ 53	m^2
	Fabric support profile special color	€ 11	m^2
	Exclusive fabric difference	€ 31	m^2
	3 Axis lighting fabric support profile difference	€ 9	m^2
-1	Sun Sensor (SUNIS) (with Universal Receiver, it's included in the price)	€ 596	pcs
-2	Wind Sensor (EOLIS RTS) (with Universal Receiver, it's included in the price)	€ 367	pcs
-3	Sun and Wind Sensor (SOLIRIS) (with Universal Receiver, it's included in the price)	€ 459	pcs
	CONNEXOON	€246	pcs
-1	Remote Control - PURE - Telis 1	€55	pcs
-4	Remote Control - PURE - Telis 4	€93	pcs
-16	Remote Control - PURE - Telis 16	€264	pcs
-1	Remote Control - PATIO - Telis 1	€76	pcs
-4	Remote Control - PATIO - Telis 4	€123	pcs
-1	Remote Control - LOUNGE - Telis 1	€93	pcs
-4	Remote Control - LOUNGE - Telis 4	€133	pcs
-1	Remote Control - MODULIS PURE - Telis 1	€125	pcs
-4	Remote Control - MODULIS PURE - Telis 4	€192	pcs
-1	Remote Control - MODULIS LOUNGE - Telis 1	€144	pcs
-4	Remote Control - MODULIS LOUNGE - Telis 4	€220	pcs

apply a sensor to the single motor product. For further information please contact with PALMIYE

BACK PILLAR POSITION CHANGE

B \ A	500	550	600	650	700	750	800	850	900
400									
500									
600									

BACK PILLAR : Al. 100x100x3mm
BACK BEAM : Al. 100x150x3mm

BACK PILLAR : St. 100x100x3mm
BACK BEAM : St. 100x150x3mm

BACK PILLAR : St. 100x100x5mm
BACK BEAM : St. 100x150x5mm

BACK PILLAR : St. 100x100x5mm
BACK BEAM : Al. 100x200x5mm

(construction price difference needs to be added)

STANDARD CONSTRUCTION

PROJECTION \ WIDTH	450	500	550	600	650	700	750	800	850	900	950	1000	1100	1200	1300
400															
450															
500															
550															
600															

BACK PILLAR : Al. 100x100x3mm
BACK BEAM : Al. 100x150x3mm
(in price included)

EXTENSIONS

Rail	COMPACT - 75x120mm	€ 128	lm
Beam	Al. 40x120mm	€ 42	lm
Beam	Al. 42x150mm	€ 65	lm
Beam	Al. 50x150mm	€ 115	lm
Beam	Al. 80x130mm	€ 61	lm
Beam	Al. 100x150mm	€ 96	lm
Beam	St. 100x150x3mm	€ 190	lm
Beam	St. 100x150x5mm	€ 246	lm
Beam	St. 100x200x3mm	€ 193	lm
Beam	St. 100x200x5mm	€ 293	lm
Fabric protection cover	Al. - 63x___cm	€ 37	m^2
Gutter	Special Profile	€ 28	lm
Pillar	Al. 80x80mm	€ 56	lm
Pillar	Al. 100x100mm	€ 107	lm
Pillar	St. 100x100x3mm	€ 129	lm
Pillar	St. 100x100x5mm	€ 246	lm
Pillar	St. 150x150x3mm	€ 261	lm
Pillar	St. 150x150x5mm	€ 390	lm

Max. Al. front pillar height is 280 cm
Max. St 3mm front pillar height is 380 cm
Max. St 5mm front pillar height is 480 cm

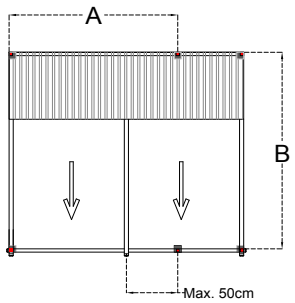

PRICE DIFFERENCE

BEAM GROUP

Back Beam	Standard	Al. 100x150mm		
	to	St. 100x150x3mm	€ 95	lm
		St. 100x150x5mm	€ 151	lm
		St. 100x200x3mm	€ 98	lm
		St. 100x200x5mm	€ 197	lm
Front Beam	Standard	Al. 80x130mm		
	to	Al. 100x150mm	€ 35	lm
		St. 100x150x3mm	€ 130	lm
		St. 100x150x5mm	€ 186	lm
		St. 100x200x3mm	€ 133	lm
		St. 100x200x5mm	€ 233	lm

PILLAR GROUP

Back Pillar	Standard	Al. 100x100mm		
	to	St. 100x100x3mm	€ 66	pcs
		St. 100x100x5mm	€ 289	pcs
		St. 150x150x3mm	€ 414	pcs
		St. 150x150x5mm	€ 781	pcs
Front Pillar	Standard	Al. 80x80mm		
	to	Al. 100x100mm	€ 88	pcs
		St. 100x100x3mm	€ 155	pcs
		St. 100x100x5mm	€ 377	pcs
		St. 150x150x3mm	€ 502	pcs
		St. 150x150x5mm	€ 870	pcs

DEDUCTIONS
Price deduction can apply only front pillars, back pillars and side beam. The price of the front pillar, back pillar and side beam can be deducted from options price.

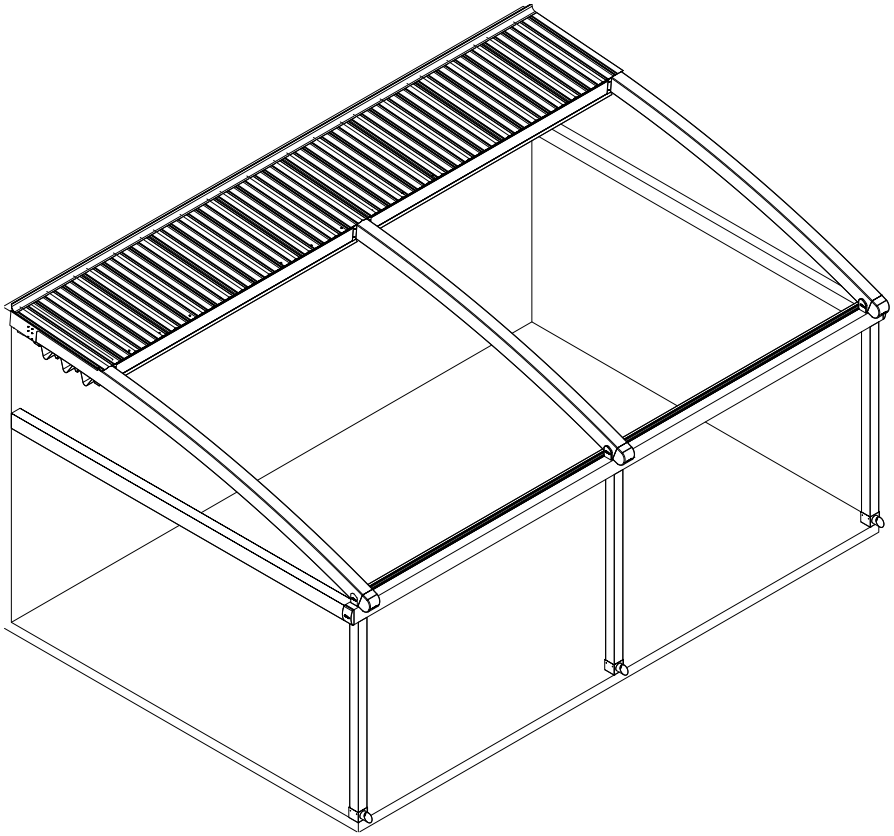

CORAL

I N D E X

PRODUCT FORMS

- **CORAL PLUS** Wall / Ceiling Installation

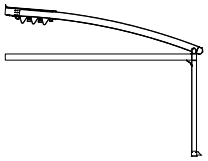

- **CORAL PLUS** Freestanding

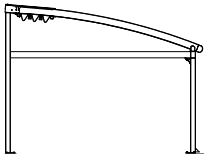

- **CORAL COMPACT** Wall / Ceiling Installation

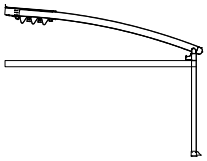

- **CORAL COMPACT** Freestanding

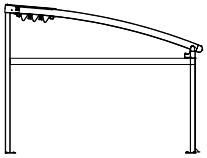

PLUS
Wall / Ceiling

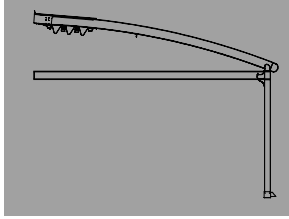

MAXIMUM DIMENSIONS

	WIDTH	PROJECTION
2 RAILS	400 cm	800 cm
3 RAILS	800 cm	800 cm
4 RAILS	1200 cm	800 cm
5 RAILS	1300 cm	800 cm

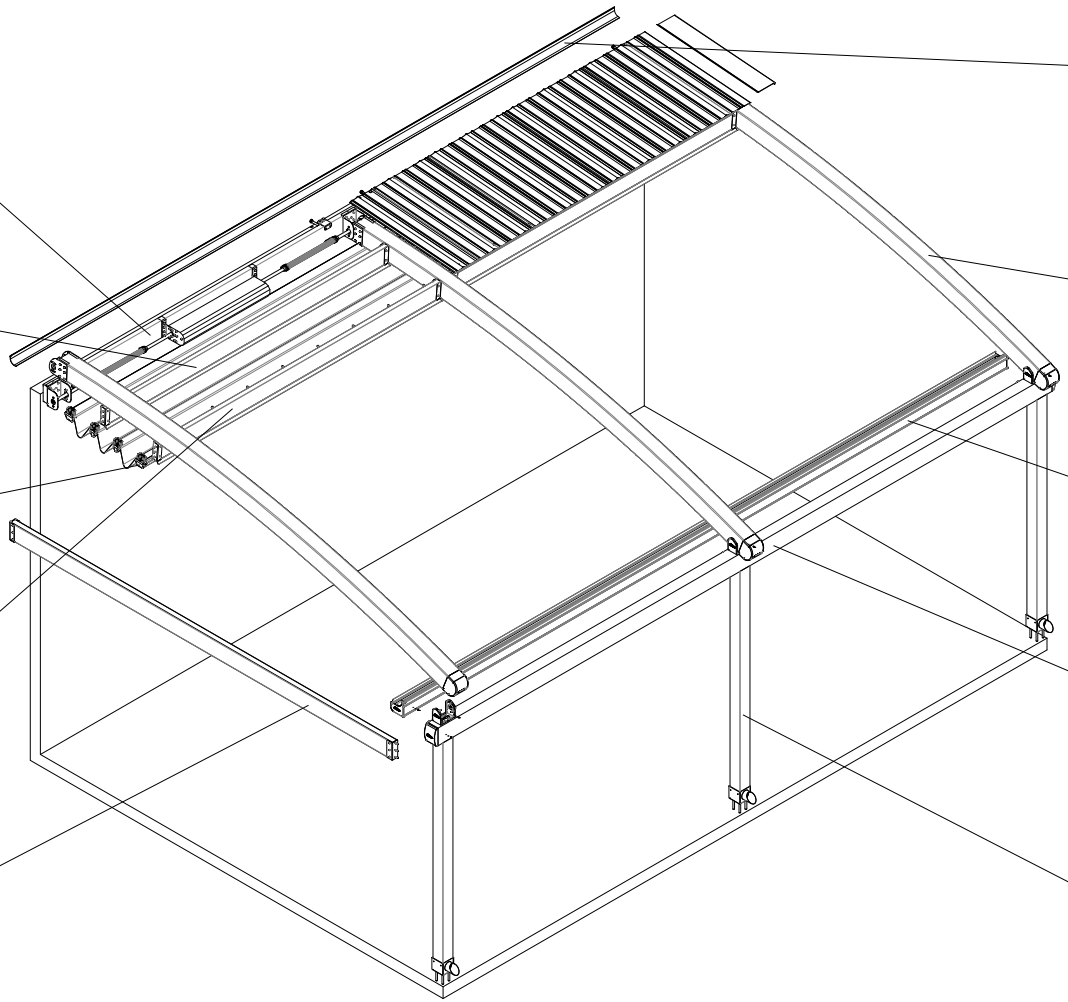

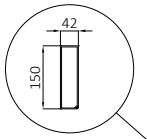

ALM.PRF.G1012
Back Beam

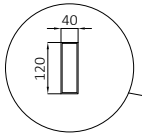

ALM.PRF.G1019
Cross Beam

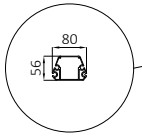

ALM.PRF.P1030
Fabric Support Profile (Double)

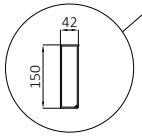

ALM.PRF.G1012
Front Cross Beam

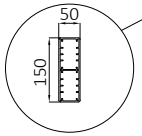

ALM.PRF.G1009
Side Beam

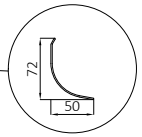

ALM.PRF.G1011
Wall Finish

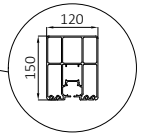

ALM.PRF.P1008
Rail Profile

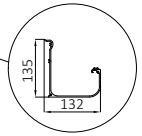

ALM.PRF.P1007
Gutter

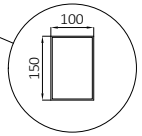

ALM.PRF.G1003
Front Beam

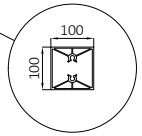

ALM.PRF.G1001
Front Pillar

TECHNICAL FEATURES

COLLECTED FABRIC DIMENSIONS

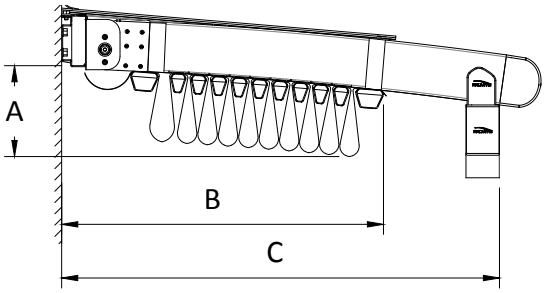

Projection cm

No of Fabric Support Profiles	200	250	300	350	400	450	500	550	600	650	700	750	800	C
5														68
6														74
7			32											81
9				34										94
10					35									100
11						36								107
13							38							120
14								39						127
15									40					133
17										42				146
18											43			152
19												44		159
21													46	172
						A								B

*Calculated according to a slope of 15%

DRAINAGE CALCULATION

Type	Max. m²
Full	39 m²/pc
Half	18 m²/pc

* per drainage

There should be at least one drainage, each 8 m length gutter.

RADIUS CHART

RADIUS	850	1500	2850

Projection	A			
250	63			
300	83			
350	107			
400	135	82		
450	168	98		
500		116		B
550		137		
600		160	93	
650		184	106	
700			119	
750			133	
800			149	

*The values are approx. ± 5 cm

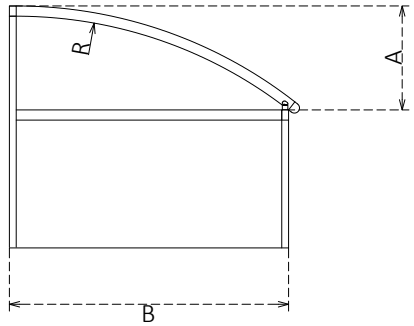

WIND RESISTANCE

WIDTH (cm)

	450	500	550	600	650	700	750	800	850	900	950	1000	1050	1100	1150	1200	1250	1300
400	11	11	11	11	11	11	11	11	11	11	11	11	11	11	11	11	11	11
450	11	11	11	11	11	11	11	11	11	11	11	11	11	11	11	11	11	11
500	11	11	11	11	11	11	11	11	11	11	11	11	11	11	11	11	11	11
550	11	11	11	11	11	11	11	11	11	11	11	11	11	11	11	11	11	11
600	11	11	11	11	11	11	10	10	11	11	11	11	11	11	10	10	11	11
650	11	11	11	11	10	10	10	9	11	11	10	10	10	10	10	9	10	10
700	11	10	10	10	10	10	9	9	10	10	10	10	10	10	9	9	10	10
750	10	10	10	9	9	9	9	8	10	9	9	9	9	9	9	8	9	
800	10	10	9	9	9	9	8	8	10	9	9	9	9	9	8	8		

All sides open

WIDTH (cm)

PROJECTION (cm)

	450	500	550	600	650	700	750	800	850	900	950	1000	1050	1100	1150	1200	1250	1300
400	11	11	11	11	11	10	10	10	11	11	11	11	10	10	10	10	11	11
450	11	11	10	10	10	10	10	10	11	10	10	10	10	10	10	10	10	10
500	10	10	10	10	10	10	10	10	10	10	10	10	10	10	10	10	10	10
550	10	10	9	9	9	9	9	9	10	9	9	9	9	9	9	9	9	9
600	10	9	9	9	9	9	9	9	9	9	9	9	9	9	9	9	9	9
650	9	9	9	9	9	9	8	8	9	9	9	9	9	9	8	8	9	9
700	9	9	9	9	8	8	8	8	9	9	8	8	8	8	8	8	8	8
750	8	8	8	8	8	8	8	8	8	8	8	8	8	8	8	8	8	
800	8	8	8	8	8	8	7	7	8	8	8	8	8	8	7	7		

With side enclosure

*The values are given according to the Beaufort scale.

**Calculated for Products with a front height of 250 cm according to Eurocode EN 1991-1-4 Terrain Category 4.

*** You can ask for new calculations for special designs.

CORAL PLUS Wall / Ceiling

Width

Projection

	2 RAILS				3 RAILS								4 RAILS								5 RAILS		FS4	FS9	FS9-S
	250 cm	300 cm	350 cm	400 cm	450 cm	500 cm	550 cm	600 cm	650 cm	700 cm	750 cm	800 cm	850 cm	900 cm	950 cm	1000 cm	1050 cm	1100 cm	1150 cm	1200 cm	1250 cm	1300 cm			
200 cm	€ 4.847	€ 5.086	€ 5.549	€ 5.792	€ 6.840	€ 7.080	€ 7.323	€ 7.562	€ 8.025	€ 8.268	€ 8.551	€ 8.791	€ 9.629	€ 9.862	€ 10.314	€ 10.548	€ 10.778	€ 11.010	€ 11.241	€ 11.473	€ 12.807	€ 13.171	€ 734	€ 150	€ 199
250 cm	€ 5.106	€ 5.476	€ 5.825	€ 6.076	€ 7.233	€ 7.480	€ 7.856	€ 8.103	€ 8.452	€ 8.699	€ 8.991	€ 9.364	€ 10.309	€ 10.553	€ 10.888	€ 11.129	€ 11.495	€ 11.734	€ 11.974	€ 12.213	€ 13.657	€ 14.027	€ 811	€ 181	€ 249
300 cm	€ 5.509	€ 5.922	€ 6.308	€ 6.594	€ 7.896	€ 8.182	€ 8.595	€ 8.881	€ 9.267	€ 9.554	€ 9.883	€ 10.295	€ 11.384	€ 11.660	€ 12.039	€ 12.316	€ 12.719	€ 12.994	€ 13.275	€ 13.554	€ 15.138	€ 15.548	€ 887	€ 212	€ 299
350 cm	€ 5.903	€ 6.200	€ 6.592	€ 7.012	€ 8.426	€ 8.719	€ 9.015	€ 9.434	€ 9.830	€ 10.123	€ 10.463	€ 10.883	€ 12.084	€ 12.370	€ 12.876	€ 13.166	€ 13.452	€ 13.738	€ 14.147	€ 14.433	€ 16.131	€ 16.428	€ 963	€ 243	€ 349
400 cm	€ 6.174	€ 6.476	€ 6.879	€ 7.305	€ 8.833	€ 9.136	€ 9.443	€ 9.868	€ 10.271	€ 10.574	€ 10.920	€ 11.346	€ 12.664	€ 12.957	€ 13.472	€ 13.769	€ 14.065	€ 14.358	€ 14.778	€ 15.070	€ 16.885	€ 17.188	€ 1.040	€ 274	€ 399
450 cm	€ 6.451	€ 6.764	€ 7.173	€ 7.609	€ 9.251	€ 9.563	€ 9.875	€ 10.308	€ 10.721	€ 11.031	€ 11.387	€ 11.824	€ 13.251	€ 13.554	€ 14.079	€ 14.382	€ 14.685	€ 14.988	€ 15.415	€ 15.718	€ 17.644	€ 17.954	€ 1.116	€ 305	€ 449
500 cm	€ 6.723	€ 7.043	€ 7.462	€ 7.905	€ 9.663	€ 9.983	€ 10.302	€ 10.745	€ 11.164	€ 11.484	€ 11.846	€ 12.289	€ 13.836	€ 14.146	€ 14.679	€ 14.991	€ 15.301	€ 15.610	€ 16.047	€ 16.359	€ 18.400	€ 18.720	€ 1.192	€ 336	€ 499
550 cm	€ 7.142	€ 7.621	€ 8.080	€ 8.560	€ 10.463	€ 10.823	€ 11.306	€ 11.648	€ 12.244	€ 12.601	€ 13.003	€ 13.482	€ 15.176	€ 15.650	€ 16.095	€ 16.445	€ 16.921	€ 17.267	€ 17.740	€ 18.089	€ 20.279	€ 20.758	€ 1.269	€ 367	€ 549
600 cm	€ 7.424	€ 7.913	€ 8.379	€ 8.868	€ 10.885	€ 11.251	€ 11.744	€ 12.110	€ 12.699	€ 13.066	€ 13.475	€ 13.964	€ 15.771	€ 16.250	€ 16.806	€ 17.066	€ 17.549	€ 17.905	€ 18.385	€ 18.743	€ 21.047	€ 21.536	€ 1.345	€ 398	€ 598
650 cm	€ 7.697	€ 8.193	€ 8.670	€ 9.165	€ 11.303	€ 11.675	€ 12.174	€ 12.547	€ 13.146	€ 13.519	€ 13.939	€ 14.438	€ 16.358	€ 16.851	€ 17.314	€ 17.680	€ 18.169	€ 18.531	€ 19.025	€ 19.391	€ 21.810	€ 22.306	€ 1.421	€ 429	€ 648
700 cm	€ 7.973	€ 8.478	€ 8.961	€ 9.468	€ 11.721	€ 12.100	€ 12.609	€ 12.992	€ 13.598	€ 13.977	€ 14.404	€ 14.909	€ 16.949	€ 17.449	€ 17.922	€ 18.294	€ 18.794	€ 19.163	€ 19.663	€ 20.038	€ 22.572	€ 23.077	€ 1.497	€ 460	€ 698
750 cm	€ 8.252	€ 8.764	€ 9.257	€ 9.769	€ 12.138	€ 12.528	€ 13.041	€ 13.433	€ 14.046	€ 14.438	€ 14.871	€ 15.384	€ 17.540	€ 18.047	€ 18.526	€ 18.909	€ 19.415	€ 19.797	€ 20.303	€ 20.686	€ 23.338		€ 1.574	€ 491	€ 748
800 cm	€ 8.531	€ 9.050	€ 9.552	€ 10.071	€ 12.556	€ 12.956	€ 13.472	€ 13.874	€ 14.494	€ 14.900	€ 15.338	€ 15.858	€ 18.132	€ 18.646	€ 19.131	€ 19.524	€ 20.036	€ 20.432	€ 20.943	€ 21.333			€ 1.650	€ 522	€ 798

FS3	€ 149	€ 156	€ 170	€ 187	€ 203	€ 218	€ 234	€ 249	€ 265	€ 280	€ 360	€ 376	€ 391	€ 407	€ 423	€ 439	€ 454	€ 470	€ 485	€ 501	€ 516	€ 532
FS5-A	€ 27	€ 35	€ 41	€ 46	€ 54	€ 60	€ 67	€ 73	€ 80	€ 86	€ 93	€ 99	€ 106	€ 112	€ 119	€ 125	€ 132	€ 138	€ 145	€ 151	€ 159	€ 165
FS5-E	€ 38	€ 48	€ 56	€ 64	€ 74	€ 82	€ 92	€ 100	€ 110	€ 118	€ 128	€ 136	€ 146	€ 154	€ 164	€ 172	€ 182	€ 190	€ 200	€ 209	€ 218	€ 227

FS3	Gutter System
FS5-A	Additional Fabric Support Profile (Standard)
FS5-E	Additional Fabric Support Profile (3 Axis)
FS4	Additional Rail for PLUS Series - Al. - 120x150mm
FS8	Lighting System
FS9	Side Beam for PLUS Series - Al. - 50x150mm
FS9-S	Side Beam for PLUS Series - Al. - 100x150mm (Special)

FS8	
FS8-S	SPOT
FS8-L	LINEAR
FS8-E	3 AXIS

LED TYPE & MODULE		
2 LED	3 LED	4 LED
€ 125	€ 152	€ 179
€ 179	€ 233	-
€ 206	€ 268	-

* FS9 Side Beam is not included in the price
* FS Flexy Plain/3D or Stam 6002 is included in the price
* Motor and Remote control is included in the price
* RAL Colours specified in Aluminium coating catalogue are included in price. Any other RAL colours which are existing in our Supplier's stock can be applied without extra cost.
* Standard colours are RAL9010, RAL7040, RAL1013, RAL7046, RAL9004, RAL3022, RAL120-2, RAL7036, RAL8019, RAL120-5, RAL8025, RAL4001, RAL620-3, RAL5008
* Painting cost has to be min. 125€
* Plastic parts coloured only specified colours

DEDUCTIONS

Price deduction can apply only front pillars, back pillars and side beam. The price of the front pillar, back pillar and side beam can be deducted from options price.

OPTIONS

FS10	Extra pillar (100x100mm Al.)	€ 335	pcs
FS10-ST3	Extra pillar (100x100x3mm St.)	€ 401	pcs
FS10-ST5	Extra pillar (100x100x5mm St.)	€ 623	pcs
FS11	Deco ceiling cover	€ 46	m^2
FS12	Izo-Pro ceiling cover (up to 800 cm width)	€ 39	m^2
FS15	Side beam pillar (50x100mm - Al)	€ 174	pcs
FS15-B	Side beam pillar (100x100mm - Al)	€ 335	pcs
FS16	Wood effect (*Price difference for standart patterns (up to 700cm projection) (*Can not be applied to steel construction or freestanding products with base plate.)	10% of product price	
FS19	(*Price difference for standart patterns (up to 700cm projection)	€ 46	lm
FS23	(*Can not be applied to steel construction or freestanding products with base plate.)	€ 205	pcs
FS24	W96 Ceiling Cover	€ 53	m^2
FS25	Fabric support profile special color	€ 11	m^2
FS26	Exclusive fabric difference	€ 31	m^2
FS27	3 Axis lighting fabric support profile difference	€ 9	m^2
FS29-1	Sun Sensor (SUNIS) (with Universal Receiver, it's included in the price)	€ 596	pcs
FS29-2	Wind Sensor (EOLIS RTS) (with Universal Receiver, it's included in the price)	€ 367	pcs
FS29-3	Sun and Wind Sensor (SOLIRIS) (with Universal Receiver, it's included in the price)	€ 459	pcs
FS30	CONNEXOON	€246	pcs
FS31-1	Remote Control - PURE - Telis 1	€55	pcs
FS31-4	Remote Control - PURE - Telis 4	€93	pcs
FS31-16	Remote Control - PURE - Telis 16	€264	pcs
FS32-1	Remote Control - PATIO - Telis 1	€76	pcs
FS32-4	Remote Control - PATIO - Telis 4	€123	pcs
FS33-1	Remote Control - LOUNGE - Telis 1	€93	pcs
FS33-4	Remote Control - LOUNGE - Telis 4	€133	pcs
FS34-1	Remote Control - MODULIS PURE - Telis 1	€125	pcs
FS34-4	Remote Control - MODULIS PURE - Telis 4	€192	pcs
FS35-1	Remote Control - MODULIS LOUNGE - Telis 1	€144	pcs
FS35-4	Remote Control - MODULIS LOUNGE - Telis 4	€220	pcs

*** Can't apply a sensor to the single motor product. For further information please contact with PALMIYE**

EXTENSIONS

Rail	PLUS - 120x150mm	€ 209	lm
Beam	Al. 42x150mm	€ 65	lm
Beam	Al. 50x150mm	€ 115	lm
Beam	Al. 100x150mm	€ 96	lm
Beam	St. 100x150x3mm	€ 190	lm
Beam	St. 100x150x5mm	€ 246	lm
Beam	St. 100x200x3mm	€ 193	lm
Beam	St. 100x200x5mm	€ 293	lm
Fabric protection cover	Al. - 63x___cm	€ 37	m^2
Gutter	Special Profile	€ 28	lm
Pillar	Al. 100x100mm	€ 107	lm
Pillar	St. 100x100x3mm	€ 129	lm
Pillar	St. 100x100x5mm	€ 246	lm
Pillar	St. 150x150x3mm	€ 261	lm
Pillar	St. 150x150x5mm	€ 390	lm

Max. Al. front pillar height is 280 cm
Max. St 3mm front pillar height is 380 cm
Max. St 5mm front pillar height is 480 cm

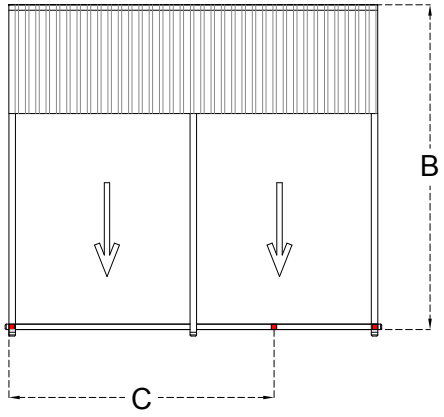

PRICE DIFFERENCE

BEAM GROUP

Back Beam	**Standard**	**Al. 42x150mm**		
	to	Al. 50x150mm	€ 50	lm
		St. 50x150x3mm	€ 62	lm
		St. 50x150x5mm	€ 122	lm
		Al. 100x150mm	€ 30	lm
		St. 100x150x3mm	€ 125	lm
		St. 100x150x5mm	€ 181	lm
		St. 100x200x3mm	€ 128	lm
		St. 100x200x5mm	€ 228	lm
Front Beam	**Standard**	**Al. 100x150mm**		
	to	St. 100x150x3mm	€ 95	lm
		St. 100x150x5mm	€ 151	lm
		St. 100x200x3mm	€ 98	lm
		St. 100x200x5mm	€ 197	lm

PILLAR GROUP

Front Pillar	**Standard**	**Al. 100x100mm**		
	to	St. 100x100x3mm	€ 66	pcs
		St. 100x100x5mm	€ 289	pcs
		St. 150x150x3mm	€ 414	pcs
		St. 150x150x5mm	€ 781	pcs

FRONT PILLAR POSITION CHANGE

B \ C	500	550	600	650	700
400					
500					
600					
700					
800					

(construction price difference needs to be added)

FRONT PILLAR : Al. 100x100x3mm
FRONT BEAM : Al. 100x150x3mm

FRONT PILLAR : St. 100x100x3mm
FRONT BEAM : St. 100x150x3mm

FRONT PILLAR : St. 100x100x5mm
FRONT BEAM : St. 100x150x5mm

PLUS
Freestanding

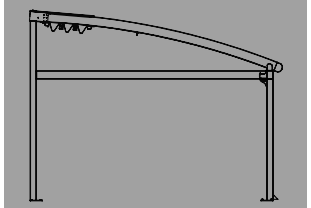

MAXIMUM DIMENSIONS

	WIDTH	PROJECTION
2 RAILS	400 cm	800 cm
3 RAILS	800 cm	800 cm
4 RAILS	1200 cm	800 cm
5 RAILS	1300 cm	800 cm

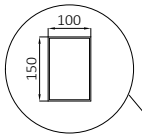

ALM.PRF.G1003
Back Beam

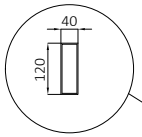

ALM.PRF.G1019
Cross Beam

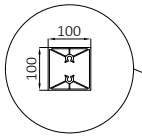

ALM.PRF.G1001
Back Pillar

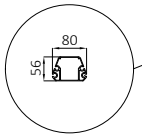

ALM.PRF.P1030
Fabric Support Profile (Double)

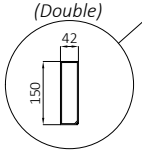

ALM.PRF.G1012
Front Cross Beam

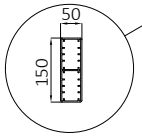

ALM.PRF.G1009
Side Beam

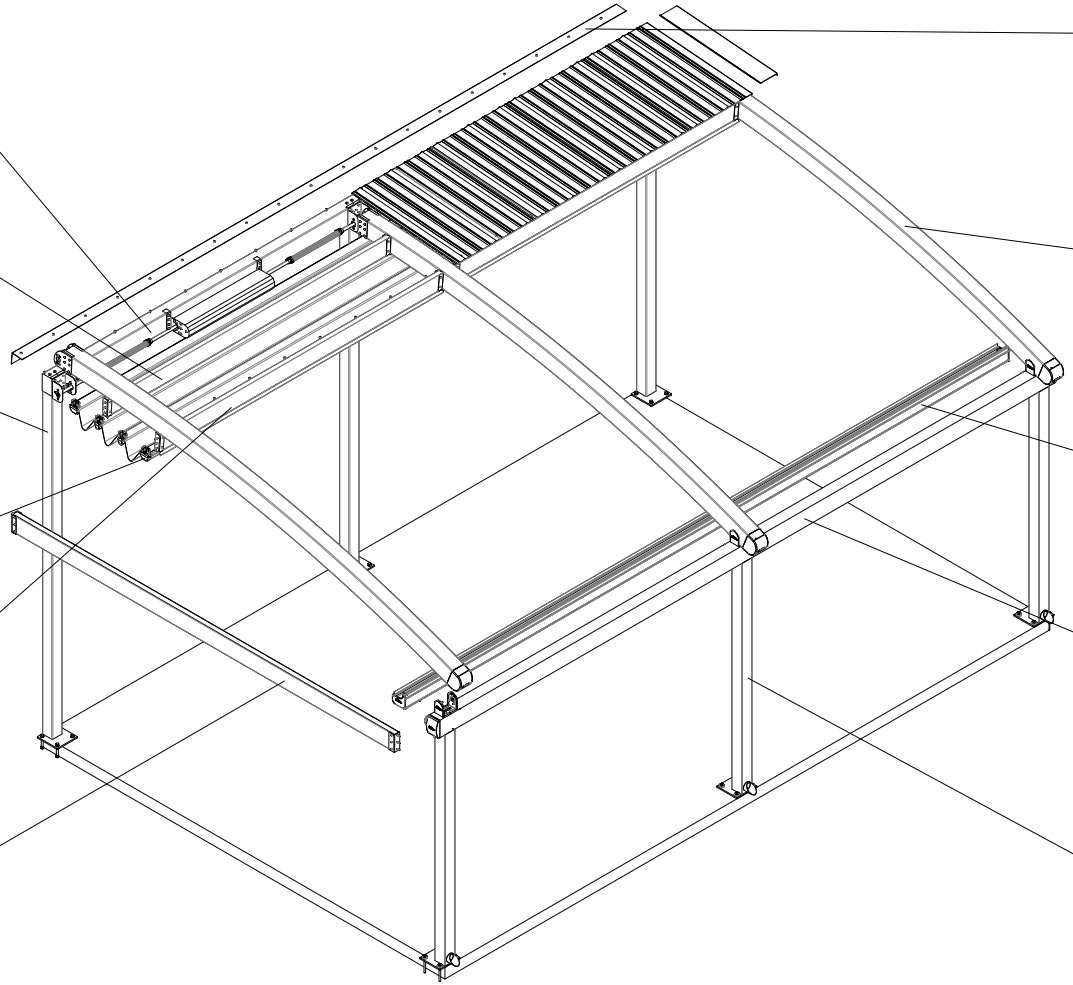

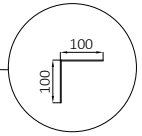

ALM.PRF.G1031
Finish Profile

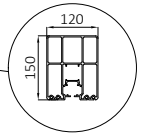

ALM.PRF.P1008
Rail Profile

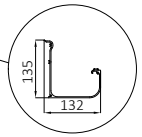

ALM.PRF.P1007
Gutter

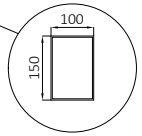

ALM.PRF.G1003
Front Beam

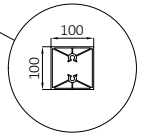

ALM.PRF.G1001
Front Pillar

TECHNICAL FEATURES

COLLECTED FABRIC DIMENSIONS

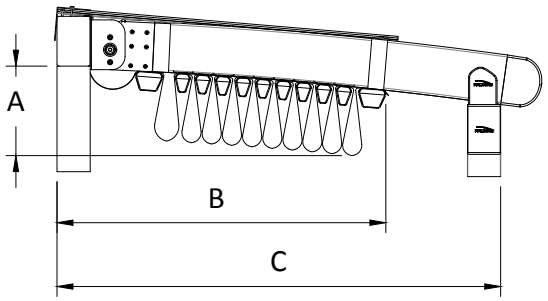

Projection cm

No of Fabric Support Profiles	200	250	300	350	400	450	500	550	600	650	700	750	800	C
5	30													68
6		31												74
7			32											81
9				34										94
10					35									100
11						36								107
13							38							120
14								39						127
15									40					133
17										42				146
18											43			152
19												44		159
21													46	172
						A								B

*Calculated according to a slope of 15%

DRAINAGE CALCULATION

Type	Max. m²
Full	39 m²/pc
Half	18 m²/pc

* per drainage

There should be at least one drainage, each 8 m length gutter.

RADIUS CHART

RADIUS	850	1500	2850

Projection	A			B
250	63			
300	83			
350	107			
400	135	82		
450	168	98		
500		116		
550		137		
600		160	93	
650		184	106	
700			119	
750			133	
800			149	

*The values are approx. ± 5 cm

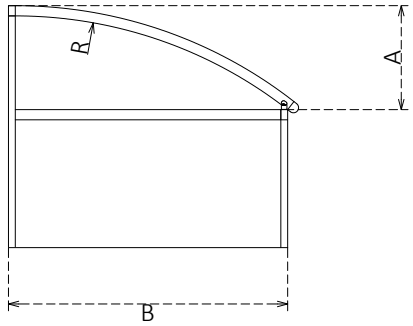

WIND RESISTANCE

WIDTH (cm)

	450	500	550	600	650	700	750	800	850	900	950	1000	1050	1100	1150	1200	1250	1300
400	11	11	11	11	10	10	9	9	11	11	10	10	10	10	9	9	10	10
450	11	11	11	11	10	9	9	8	11	11	10	10	9	9	9	8	10	10
500	11	11	11	10	9	8	8	8	11	10	9	9	8	8	8	8	9	9
550	11	10	10	10	9	8	8	7	10	10	9	9	8	8	8	7	9	9
600	10	10	10	9	8	7	7	7	10	9	8	8	7	7	7	7	8	8
650	9	9	9	8	8	7	7	7	9	8	8	8	7	7	7	7	8	8
700	9	9	8	8	7	7	7	7	9	8	7	7	7	7	7	7	7	7
750	8	8	7	7	7	7	7	7	8	7	7	7	7	7	7	7	7	
800	8	7	7	7	7	7	7	7	7	7	7	7	7	7	7	7		

All sides open

WIDTH (cm)

PROJECTION (cm)	450	500	550	600	650	700	750	800	850	900	950	1000	1050	1100	1150	1200	1250	1300
400	11	10	10	10	9	8	8	8	10	10	9	9	8	8	8	8	9	9
450	10	10	10	10	9	8	8	8	10	10	9	9	8	8	8	8	9	9
500	10	10	9	9	8	8	8	8	10	9	8	8	8	8	8	8	8	8
550	9	9	9	9	7	7	7	7	9	9	7	7	7	7	7	7	7	7
600	9	8	8	8	7	7	7	7	8	8	7	7	7	7	7	7	7	7
650	8	8	7	7	7	7	7	7	8	7	7	7	7	7	7	7	7	7
700	7	7	7	7	7	7	7	7	7	7	7	7	7	7	7	7	7	7
750	7	7	7	7	7	7	7	7	7	7	7	7	7	7	7	7	7	
800	7	7	7	7	7	7	7	7	7	7	7	7	7	7	7	7		

With side enclosure

*The values are given according to the Beaufort scale.

**Calculated for Products with a front height of 250 cm according to Eurocode EN 1991-1-4 Terrain Category 4.

*** You can ask for new calculations for special designs.

CORAL PLUS Freestanding

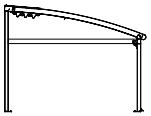

Width

	2 RAILS				3 RAILS								4 RAILS								5 RAILS		FS4	FS9	FS9-S
	250 cm	300 cm	350 cm	400 cm	450 cm	500 cm	550 cm	600 cm	650 cm	700 cm	750 cm	800 cm	850 cm	900 cm	950 cm	1000 cm	1050 cm	1100 cm	1150 cm	1200 cm	1250 cm	1300 cm			
200 cm	€ 5.587	€ 5.841	€ 6.318	€ 6.575	€ 7.972	€ 8.226	€ 8.484	€ 8.738	€ 9.214	€ 9.472	€ 9.769	€ 10.023	€ 11.210	€ 11.458	€ 11.924	€ 12.172	€ 12.416	€ 12.663	€ 12.908	€ 13.155	€ 14.837	€ 15.215	€ 734	€ 150	€ 199
250 cm	€ 5.847	€ 6.231	€ 6.594	€ 6.859	€ 8.365	€ 8.627	€ 9.016	€ 9.278	€ 9.641	€ 9.902	€ 10.209	€ 10.596	€ 11.891	€ 12.148	€ 12.497	€ 12.753	€ 13.133	€ 13.387	€ 13.641	€ 13.895	€ 15.687	€ 16.071	€ 811	€ 181	€ 249
300 cm	€ 6.250	€ 6.677	€ 7.077	€ 7.378	€ 9.028	€ 9.329	€ 9.756	€ 10.056	€ 10.457	€ 10.757	€ 11.101	€ 11.528	€ 12.965	€ 13.256	€ 13.649	€ 13.940	€ 14.357	€ 14.647	€ 14.942	€ 15.235	€ 17.168	€ 17.593	€ 887	€ 212	€ 299
350 cm	€ 6.643	€ 6.954	€ 7.361	€ 7.795	€ 9.558	€ 9.865	€ 10.175	€ 10.609	€ 11.020	€ 11.327	€ 11.681	€ 12.115	€ 13.665	€ 13.965	€ 14.486	€ 14.790	€ 15.091	€ 15.391	€ 15.815	€ 16.115	€ 18.161	€ 18.473	€ 963	€ 243	€ 349
400 cm	€ 6.914	€ 7.231	€ 7.648	€ 8.088	€ 9.965	€ 10.283	€ 10.603	€ 11.043	€ 11.461	€ 11.778	€ 12.138	€ 12.578	€ 14.245	€ 14.553	€ 15.082	€ 15.394	€ 15.704	€ 16.011	€ 16.445	€ 16.752	€ 18.915	€ 19.232	€ 1.040	€ 274	€ 399
450 cm	€ 7.192	€ 7.518	€ 7.942	€ 8.392	€ 10.383	€ 10.709	€ 11.036	€ 11.483	€ 11.910	€ 12.234	€ 12.605	€ 13.056	€ 14.832	€ 15.149	€ 15.689	€ 16.006	€ 16.324	€ 16.641	€ 17.082	€ 17.399	€ 19.674	€ 19.999	€ 1.116	€ 305	€ 449
500 cm	€ 7.463	€ 7.797	€ 8.231	€ 8.688	€ 10.795	€ 11.129	€ 11.463	€ 11.920	€ 12.354	€ 12.688	€ 13.064	€ 13.521	€ 15.417	€ 15.742	€ 16.289	€ 16.616	€ 16.940	€ 17.263	€ 17.714	€ 18.041	€ 20.430	€ 20.764	€ 1.192	€ 336	€ 499
550 cm	€ 7.882	€ 8.376	€ 8.849	€ 9.344	€ 11.595	€ 11.970	€ 12.467	€ 12.823	€ 13.434	€ 13.805	€ 14.221	€ 14.714	€ 16.757	€ 17.245	€ 17.705	€ 18.069	€ 18.559	€ 18.920	€ 19.407	€ 19.770	€ 22.309	€ 22.803	€ 1.269	€ 367	€ 549
600 cm	€ 8.563	€ 9.066	€ 9.546	€ 10.050	€ 12.415	€ 12.796	€ 13.303	€ 13.683	€ 14.286	€ 14.668	€ 15.091	€ 15.594	€ 17.750	€ 18.244	€ 18.814	€ 19.088	€ 19.586	€ 19.956	€ 20.450	€ 20.823	€ 23.475	€ 23.978	€ 1.345	**€ 398**	**€ 598**
650 cm	€ 8.867	€ 9.377	€ 9.868	€ 10.377	€ 12.864	€ 13.250	€ 13.764	€ 14.152	€ 14.764	€ 15.152	€ 15.586	€ 16.100	€ 18.368	€ 18.876	€ 19.353	€ 19.733	€ 20.236	€ 20.613	€ 21.121	€ 21.502	€ 24.269	€ 24.780	€ 1.421	**€ 429**	**€ 648**
700 cm	€ 9.173	€ 9.693	€ 10.190	€ 10.711	€ 13.313	€ 13.707	€ 14.230	€ 14.627	€ 15.701	€ 16.122	€ 16.590	€ 17.138	€ 20.057	€ 20.618	€ 20.610	€ 21.024	€ 21.565	€ 21.976	€ 22.517	€ 22.935	€ 25.844	€ 27.949	€ 1.497	**€ 460**	**€ 698**
750 cm	€ 9.483	€ 10.010	€ 10.517	€ 11.044	€ 13.762	€ 14.166	€ 14.693	€ 15.526	€ 16.180	€ 16.614	€ 17.089	€ 17.643	€ 21.243	€ 21.838	€ 21.245	€ 21.670	€ 22.217	€ 22.641	€ 23.189	€ 23.613	€ 26.642		€ 1.574	**€ 491**	**€ 748**
800 cm	€ 9.793	€ 10.327	€ 10.844	€ 11.377	€ 14.210	€ 14.625	€ 15.554	€ 15.998	€ 17.472	€ 17.966	€ 18.493	€ 19.102	€ 21.865	€ 22.468	€ 23.042	€ 23.524	€ 24.125	€ 24.609	€ 25.210	€ 25.688			€ 1.650	**€ 522**	**€ 798**

*For Freestanding products has to add "SIDE BEAM" bigger 599cm projection

FS3	€ 149	€ 156	€ 170	€ 187	€ 203	€ 218	€ 234	€ 249	€ 265	€ 280	€ 360	€ 376	€ 391	€ 407	€ 423	€ 439	€ 454	€ 470	€ 485	€ 501	€ 516	€ 532
FS5-A	€ 27	€ 35	€ 41	€ 46	€ 54	€ 60	€ 67	€ 73	€ 80	€ 86	€ 93	€ 99	€ 106	€ 112	€ 119	€ 125	€ 132	€ 138	€ 145	€ 151	€ 159	€ 165
FS5-E	€ 38	€ 48	€ 56	€ 64	€ 74	€ 82	€ 92	€ 100	€ 110	€ 118	€ 128	€ 136	€ 146	€ 154	€ 164	€ 172	€ 182	€ 190	€ 200	€ 209	€ 218	€ 227

FS3	Gutter&Downpipe
FS4	Additional Rail (PLUS - 120x150mm Al.)
FS5-A	Additional Standard Fabric Support Profile
FS5-E	Additional 3 Axis Fabric Support Profile
FS9-S	Side Beam (100x150mm - Special)
FS9	Side Beam (50x150mm Al)

FS8	
FS8-S	SPOT
FS8-L	LINEAR
FS8-E	3 AXIS

LED TYPE & MODULE		
2 LED	3 LED	4 LED
€ 125	€ 152	€ 179
€ 179	€ 233	-
€ 206	€ 268	-

* FS9 Side Beam is not included in the price
* FS Flexy Plain/3D or Stam 6002 is included in the price
* Motor and Remote control is included in the price
* RAL Colours specified in Aluminium coating catalogue are included in price. Any other RAL colours which are existing in our Supplier's stock can be applied without extra cost.
* Standard colours are RAL9010, RAL7040, RAL1013, RAL7046, RAL9004, RAL3022, RAL120-2, RAL7036, RAL8019, RAL120-5, RAL8025, RAL4001, RAL620-3, RAL5008
* Painting cost has to be min. 125€
* Plastic parts coloured only specified colours

DEDUCTIONS

Price deduction can apply only front pillars, back pillars and side beam. The price of the front pillar, back pillar and side beam can be deducted from options price.

OPTIONS

FS10	Extra pillar (100x100mm Al.)	€ 335	pcs
FS10-ST3	Extra pillar (100x100x3mm St.)	€ 401	pcs
FS10-ST5	Extra pillar (100x100x5mm St.)	€ 623	pcs
FS11	Deco ceiling cover	€ 46	m^2
FS12	Izo-Pro ceiling cover (up to 800 cm width)	€ 39	m^2
FS15	Side beam pillar (50x100mm - Al)	€ 174	pcs
FS15-B	Side beam pillar (100x100mm - Al)	€ 335	pcs
FS16	Wood effect (*Price difference for standart patterns (up to 700cm projection) (*Can not be applied to steel construction or freestanding products with base plate.)	10% of product price	
FS19	Fix louver	€ 46	lm
FS23	External Square Downpipe	€ 205	pcs
FS24	W96 Ceiling Cover	€ 53	m^2
FS25	Fabric support profile special color	€ 11	m^2
FS26	Exclusive fabric difference	€ 31	m^2
FS27	3 Axis lighting fabric support profile difference	€ 9	m^2
FS29-1	Sun Sensor (SUNIS) (with Universal Receiver, it's included in the price)	€ 596	pcs
FS29-2	Wind Sensor (EOLIS RTS) (with Universal Receiver, it's included in the price)	€ 367	pcs
FS29-3	Sun and Wind Sensor (SOLIRIS) (with Universal Receiver, it's included in the price)	€ 459	pcs
FS30	CONNEXOON	€246	pcs
FS31-1	Remote Control - PURE - Telis 1	€55	pcs
FS31-4	Remote Control - PURE - Telis 4	€93	pcs
FS31-16	Remote Control - PURE - Telis 16	€264	pcs
FS32-1	Remote Control - PATIO - Telis 1	€76	pcs
FS32-4	Remote Control - PATIO - Telis 4	€123	pcs
FS33-1	Remote Control - LOUNGE - Telis 1	€93	pcs
FS33-4	Remote Control - LOUNGE - Telis 4	€133	pcs
FS34-1	Remote Control - MODULIS PURE - Telis 1	€125	pcs
FS34-4	Remote Control - MODULIS PURE - Telis 4	€192	pcs
FS35-1	Remote Control - MODULIS LOUNGE - Telis 1	€144	pcs
FS35-4	Remote Control - MODULIS LOUNGE - Telis 4	€220	pcs

*** Can't apply a sensor to the single motor product. For further information please contact with PALMIYE**

BACK PILLAR POSITION CHANGE

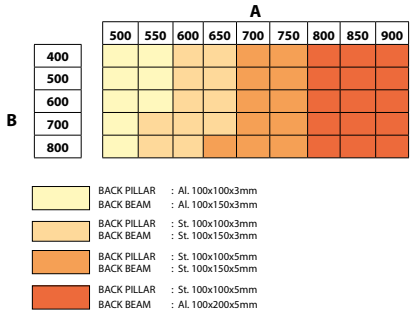

(construction price difference needs to be added)

FRONT PILLAR POSITION CHANGE

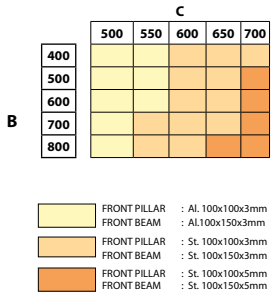

(construction price difference needs to be added)

STANDARD CONSTRUCTION

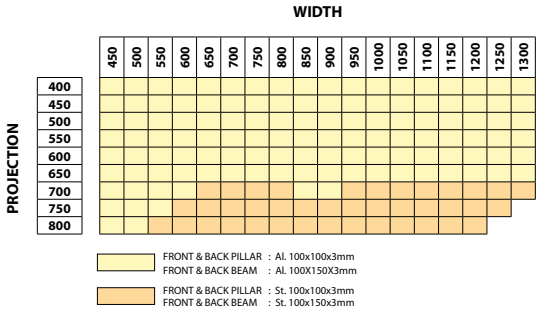

(in price included)

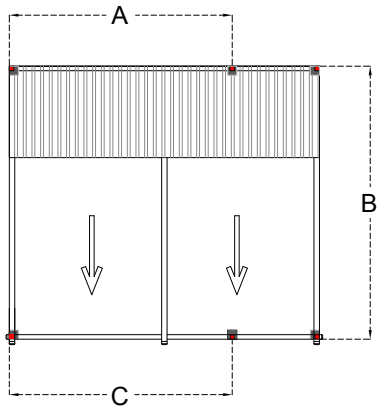

EXTENSIONS

Rail	PLUS - 120x150mm	€ 209	lm
Beam	Al. 100x150mm	€ 96	lm
Beam	St. 100x150x3mm	€ 190	lm
Beam	St. 100x150x5mm	€ 246	lm
Beam	St. 100x200x3mm	€ 193	lm
Beam	St. 100x200x5mm	€ 293	lm
Fabric protection cover	Al. - 63x___cm	€ 37	m^2
Gutter	Special Profile	€ 28	lm
Pillar	Al. 100x100mm	€ 107	lm
Pillar	St. 100x100x3mm	€ 129	lm
Pillar	St. 100x100x5mm	€ 246	lm
Pillar	St. 150x150x3mm	€ 261	lm
Pillar	St. 150x150x5mm	€ 390	lm

Max. Al. front pillar height is 280 cm
Max. St 3mm front pillar height is 380 cm
Max. St 5mm front pillar height is 480 cm

PRICE DIFFERENCE

	BEAM GROUP			
	Standard	**Al. 100x150mm**		
Beam	to	St. 100x150x3mm	€ 95	lm
		St. 100x150x5mm	€ 151	lm
		St. 100x200x3mm	€ 98	lm
		St. 100x200x5mm	€ 197	lm
	PILLAR GROUP			
	Standard	**Al. 100x100mm**		
Pillar	to	St. 100x100x3mm	€ 66	pcs
		St. 100x100x5mm	€ 289	pcs
		St. 150x150x3mm	€ 414	pcs
		St. 150x150x5mm	€ 781	pcs

COMPACT
Wall / Ceiling

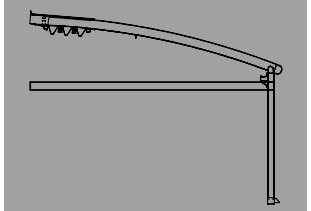

MAXIMUM DIMENSIONS

	WIDTH	PROJECTION
2 RAILS	400 cm	600 cm
3 RAILS	800 cm	600 cm
4 RAILS	1200 cm	600 cm
5 RAILS	1300 cm	600 cm

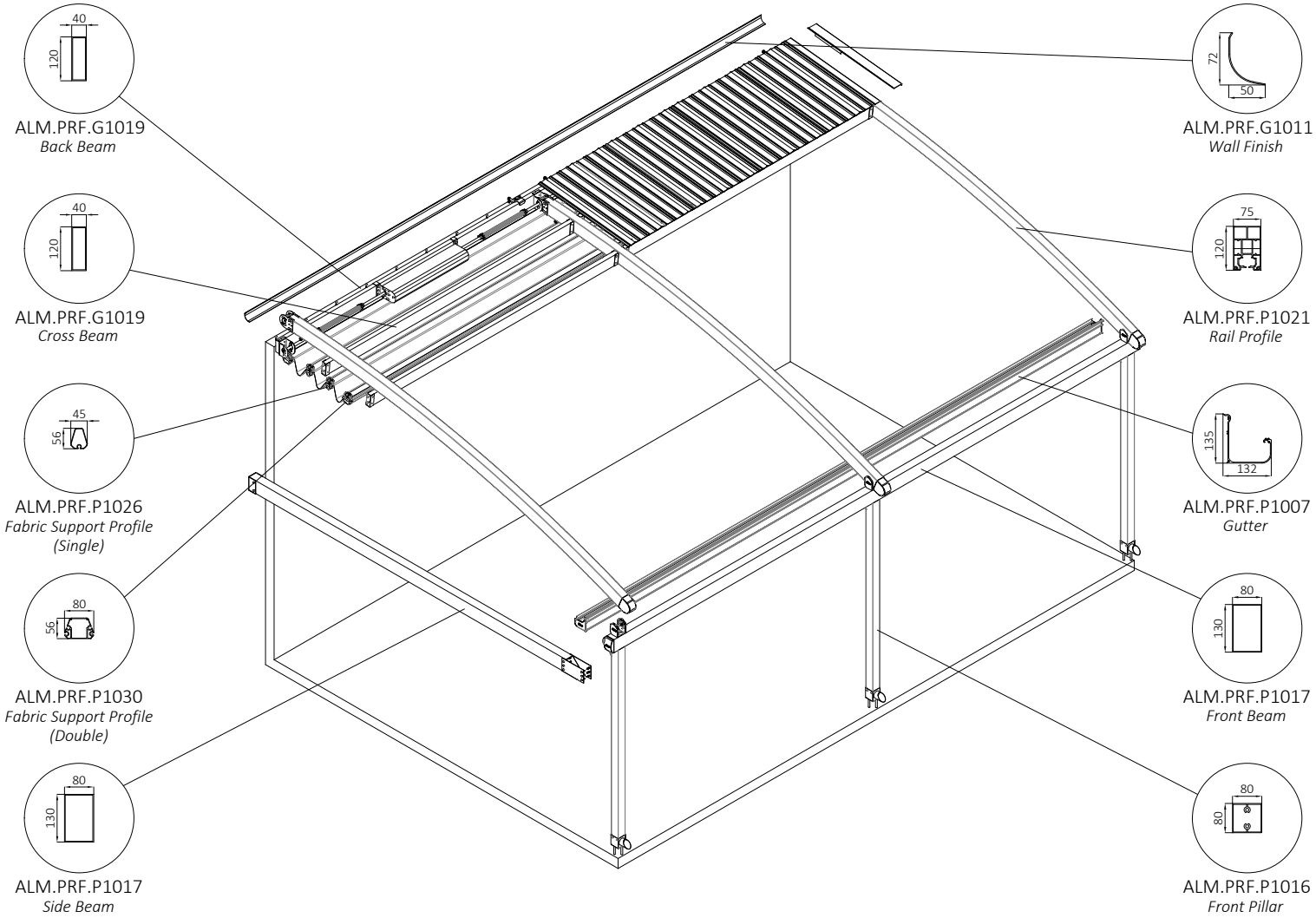

TECHNICAL FEATURES

COLLECTED FABRIC DIMENSIONS

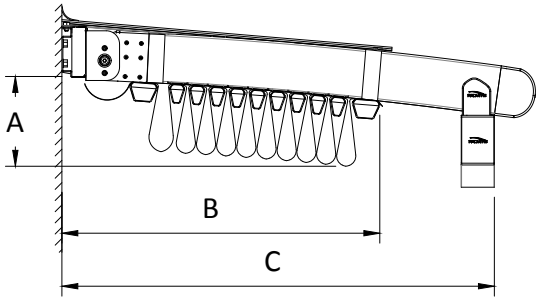

DRAINAGE CALCULATION

Type	Max. m²
COMPACT	30 m²/pc

* per drainage

There should be at least one drainage, each 8 m length gutter.

RADIUS CHART

RADIUS	850	1500	2850

Projection	A			
250	63			
300	83			
350	107			
400	135	82		B
450	168	98		
500		116		
550		137		
600		160	93	

*The values are approx. ± 5 cm

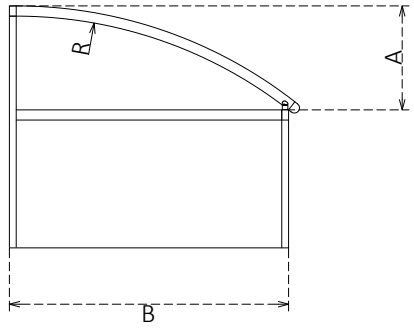

No of Fabric Support Profiles	Projection cm: 200	250	300	350	400	450	500	550	600	C
5	30									68
6		31								74
7			32							81
9				34						94
10					35					100
11						36				107
13							38			120
14								39		126
15									40	133
	A									B

*Calculated according to a slope of 15%

WIND RESISTANCE

WIDTH (cm)

	450	500	550	600	650	700	750	800	850	900	950	1000	1050	1100	1150	1200	1250	1300
400	11	11	11	11	11	11	11	11	11	11	11	11	11	11	11	11	11	11
450	11	11	11	11	11	11	10	10	11	11	11	11	11	11	10	10	11	11
500	11	11	10	10	10	10	10	9	11	10	10	10	10	10	10	9	10	10
550	10	10	10	10	10	9	9	9	10	10	10	10	9	9	9	9	10	10
600	10	10	10	9	9	9	8	8	10	9	9	9	9	9	8	8	9	9

All sides open

WIDTH (cm)

PROJECTION (cm)	450	500	550	600	650	700	750	800	850	900	950	1000	1050	1100	1150	1200	1250	1300
400	11	10	10	10	10	10	10	10	10	10	10	10	10	10	10	10	10	10
450	10	10	10	10	10	10	9	9	10	10	10	10	10	10	9	9	10	10
500	10	9	9	9	9	9	9	8	9	9	9	9	9	9	9	8	9	9
550	9	9	9	9	9	8	8	8	9	9	9	9	8	8	8	8	9	9
600	9	9	9	8	8	8	8	7	9	8	8	8	8	8	8	7	8	8

With side enclosure

*The values are given according to the Beaufort scale.

**Calculated for Products with a front height of 250 cm according to Eurocode EN 1991-1-4 Terrain Category 4.

*** You can ask for new calculations for special designs.

COMPACT Wall / Ceiling

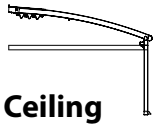

Width

Projection

	2 RAILS				3 RAILS								4 RAILS								5 RAILS		FS4 FS10-C	FS9-C
	250 cm	300 cm	350 cm	400 cm	450 cm	500 cm	550 cm	600 cm	650 cm	700 cm	750 cm	800 cm	850 cm	900 cm	950 cm	1000 cm	1050 cm	1100 cm	1150 cm	1200 cm	1250 cm	1300 cm		
200 cm	€ 3.927	€ 4.119	€ 4.494	€ 4.689	€ 5.536	€ 5.728	€ 5.922	€ 6.114	€ 6.486	€ 6.680	€ 6.907	€ 7.099	€ 7.772	€ 7.960	€ 8.321	€ 8.507	€ 8.690	€ 8.874	€ 9.058	€ 9.241	€ 10.313	€ 10.603	€ 852	€ 124
250 cm	€ 4.134	€ 4.432	€ 4.713	€ 4.913	€ 5.848	€ 6.046	€ 6.348	€ 6.544	€ 6.824	€ 7.021	€ 7.255	€ 7.554	€ 8.314	€ 8.508	€ 8.775	€ 8.966	€ 9.258	€ 9.449	€ 9.638	€ 9.828	€ 10.987	€ 11.280	€ 915	€ 149
300 cm	€ 4.455	€ 4.787	€ 5.098	€ 5.327	€ 6.377	€ 6.606	€ 6.938	€ 7.167	€ 7.475	€ 7.704	€ 7.967	€ 8.297	€ 9.171	€ 9.391	€ 9.693	€ 9.914	€ 10.234	€ 10.453	€ 10.674	€ 10.896	€ 12.166	€ 12.491	€ 978	€ 175
350 cm	€ 4.769	€ 5.007	€ 5.322	€ 5.660	€ 6.798	€ 7.033	€ 7.269	€ 7.605	€ 7.921	€ 8.155	€ 8.427	€ 8.762	€ 9.725	€ 9.953	€ 10.357	€ 10.587	€ 10.814	€ 11.040	€ 11.366	€ 11.591	€ 12.951	€ 13.185	€ 1.041	€ 200
400 cm	€ 4.982	€ 5.226	€ 5.549	€ 5.890	€ 7.120	€ 7.362	€ 7.607	€ 7.946	€ 8.269	€ 8.510	€ 8.786	€ 9.126	€ 10.183	€ 10.416	€ 10.826	€ 11.061	€ 11.295	€ 11.527	€ 11.861	€ 12.091	€ 13.543	€ 13.781	€ 1.103	€ 227
450 cm	€ 5.202	€ 5.451	€ 5.779	€ 6.129	€ 7.449	€ 7.698	€ 7.948	€ 8.293	€ 8.622	€ 8.869	€ 9.153	€ 9.500	€ 10.643	€ 10.884	€ 11.303	€ 11.542	€ 11.781	€ 12.020	€ 12.359	€ 12.597	€ 14.138	€ 14.381	€ 1.167	€ 252
500 cm	€ 5.415	€ 5.670	€ 6.007	€ 6.361	€ 7.774	€ 8.029	€ 8.283	€ 8.636	€ 8.971	€ 9.223	€ 9.512	€ 9.864	€ 11.102	€ 11.348	€ 11.772	€ 12.019	€ 12.264	€ 12.507	€ 12.853	€ 13.098	€ 14.728	€ 14.980	€ 1.230	€ 278
550 cm	€ 5.747	€ 6.131	€ 6.498	€ 6.882	€ 8.409	€ 8.695	€ 9.080	€ 9.352	€ 9.828	€ 10.112	€ 10.430	€ 10.811	€ 12.166	€ 12.541	€ 12.895	€ 13.171	€ 13.548	€ 13.821	€ 14.194	€ 14.469	€ 16.216	€ 16.594	€ 1.293	€ 303
600 cm	€ 5.968	€ 6.358	€ 6.731	€ 7.121	€ 8.739	€ 9.030	€ 9.422	€ 9.713	€ 10.183	€ 10.474	€ 10.798	€ 11.186	€ 12.631	€ 13.010	€ 13.451	€ 13.655	€ 14.036	€ 14.317	€ 14.696	€ 14.978	€ 16.813	€ 17.198	€ 1.356	€ 329

FS3	€ 149	€ 156	€ 170	€ 187	€ 203	€ 218	€ 234	€ 249	€ 265	€ 280	€ 360	€ 376	€ 391	€ 407	€ 423	€ 439	€ 454	€ 470	€ 485	€ 501	€ 516	€ 532
FS5	€ 27	€ 35	€ 41	€ 46	€ 54	€ 60	€ 67	€ 73	€ 80	€ 86	€ 93	€ 99	€ 106	€ 112	€ 119	€ 125	€ 132	€ 138	€ 145	€ 151	€ 159	€ 165
FS5-B	€ 38	€ 48	€ 56	€ 64	€ 74	€ 82	€ 92	€ 100	€ 110	€ 118	€ 128	€ 136	€ 146	€ 154	€ 164	€ 172	€ 182	€ 190	€ 200	€ 209	€ 218	€ 227

Note: If you use an additional rail you have to add a front pillar. It's included in the price.

FS3	Gutter&Downpipe
FS5-A	Additional Fabric Support Profile (Standard)
FS5-E	Additional Fabric Support Profile (3 Axis)
FS4 FS10-C	Additional Rail for COMPACT Series - Al. - 75x120mm Additional Pillar for COMPACT Series - Al. - 80x80mm
FS8	Lighting System
FS9-C	Side Beam for COMPACT Series - Al. - 80x130mm

FS8		LED TYPE & MODULE		
		2 LED	3 LED	4 LED
FS8-S	SPOT	€ 125	€ 152	€ 179
FS8-L	LINEAR	€ 179	€ 233	-
FS8-E	3 AXIS	€ 206	€ 268	-

*FS9 Side Beam is not included in the price
*FS Flexy Plain or FS Flexy 3D or Stam 6002 is included in the price
*Motor and Remote control is included in the price
*RAL Colours specified in Aluminium coating catalogue are included in price. Any other RAL colours which are existing in our Supplier's stock can be applied without extra cost.
* Standard colours are RAL9010, RAL7040, RAL1013, RAL7046, RAL9004, RAL3022, RAL120-2, RAL7036, RAL8019, RAL120-5, RAL8025, RAL4001, RAL620-3, RAL5008
* Painting cost has to be min. 125€
* Plastic parts coloured only specified colours

DEDUCTIONS
Price deduction can apply only front pillars, back pillars and side beam. The price of the front pillar, back pillar and side beam can be deducted from options price.

OPTIONS

FS10-C	Extra pillar (80x80mm Al.)	€ 246	pcs
FS10	Extra pillar (100x100mm Al.)	€ 335	pcs
FS10-ST3	Extra pillar (100x100x3mm St.)	€ 401	pcs
FS10-ST5	Extra pillar (100x100x5mm St.)	€ 623	pcs
FS11	Deco ceiling cover	€ 46	m^2
FS12	Izo-Pro ceiling cover (up to 800 cm width)	€ 39	m^2
FS15-C	Side beam pillar (80x80mm - Al)	€ 246	pcs
FS16	"Wood effect (*Price difference for standart patterns (up to 700cm projection) (*Can not be applied to steel construction or freestanding products with base plate.)"	"10% of product price"	
FS19	Fix louver	€ 46	lm
FS24	W96 Ceiling Cover	€ 53	m^2
FS25	Fabric support profile special color	€ 11	m^2
FS26	Exclusive fabric difference	€ 31	m^2
FS27	3 Axis lighting fabric support profile difference	€ 9	m^2
FS29-1	Sun Sensor (SUNIS) (with Universal Receiver, it's included in the price)	€ 596	pcs
FS29-2	Wind Sensor (EOLIS RTS) (with Universal Receiver, it's included in the price)	€ 367	pcs
FS29-3	Sun and Wind Sensor (SOLIRIS) (with Universal Receiver, it's included in the price)	€ 459	pcs
FS30	CONNEXOON	€246	pcs
FS31-1	Remote Control - PURE - Telis 1	€55	pcs
FS31-4	Remote Control - PURE - Telis 4	€93	pcs
FS31-16	Remote Control - PURE - Telis 16	€264	pcs
FS32-1	Remote Control - PATIO - Telis 1	€76	pcs
FS32-4	Remote Control - PATIO - Telis 4	€123	pcs
FS33-1	Remote Control - LOUNGE - Telis 1	€93	pcs
FS33-4	Remote Control - LOUNGE - Telis 4	€133	pcs
FS34-1	Remote Control - MODULIS PURE - Telis 1	€125	pcs
FS34-4	Remote Control - MODULIS PURE - Telis 4	€192	pcs
FS35-1	Remote Control - MODULIS LOUNGE - Telis 1	€144	pcs
FS35-4	Remote Control - MODULIS LOUNGE - Telis 4	€220	pcs

*** Can't apply a sensor to the single motor product. For further information please contact with PALMIYE**

EXTENSIONS

Rail	COMPACT - 75x120mm	€ 128	lm
Beam	Al. 40x120mm	€ 42	lm
Beam	Al. 42x150mm	€ 65	lm
Beam	Al. 50x150mm	€ 115	lm
Beam	Al. 80x130mm	€ 61	lm
Beam	Al. 100x150mm	€ 96	lm
Beam	St. 100x150x3mm	€ 190	lm
Beam	St. 100x150x5mm	€ 246	lm
Beam	St. 100x200x3mm	€ 193	lm
Beam	St. 100x200x5mm	€ 293	lm
Fabric protection cover	Al. - 63x___cm	€ 37	m^2
Gutter	Special Profile	€ 28	lm
Pillar	Al. 80x80mm	€ 56	lm
Pillar	Al. 100x100mm	€ 107	lm
Pillar	St. 100x100x3mm	€ 129	lm
Pillar	St. 100x100x5mm	€ 246	lm
Pillar	St. 150x150x3mm	€ 261	lm
Pillar	St. 150x150x5mm	€ 390	lm

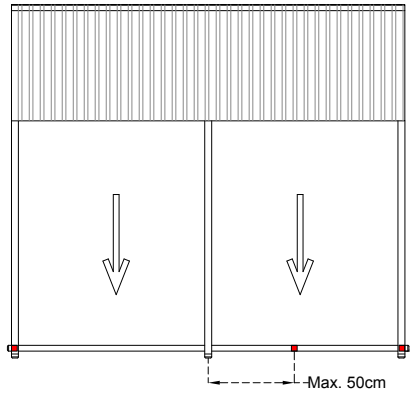

Max. Al. front pillar height is 280 cm
Max. St 3mm front pillar height is 380 cm
Max. St 5mm front pillar height is 480 cm

PRICE DIFFERENCE

BEAM GROUP

	Standard	Al. 40x120mm		
Back Beam	to	Al. 42x150mm	€ 24	lm
		Al. 50x150mm	€ 74	lm
		Al. 80x130mm	€ 19	lm
		St. 50x150x3mm	€ 86	lm
		St. 50x150x5mm	€ 146	lm
		Al. 100x150mm	€ 54	lm
		St. 100x150x3mm	€ 149	lm
		St. 100x150x5mm	€ 205	lm
		St. 100x200x3mm	€ 152	lm
		St. 100x200x5mm	€ 251	lm

	Standard	Al. 80x130mm		
Front Beam	to	Al. 100x150mm	€ 35	lm
		St. 100x150x3mm	€ 130	lm
		St. 100x150x5mm	€ 186	lm
		St. 100x200x3mm	€ 133	lm
		St. 100x200x5mm	€ 233	lm

PILLAR GROUP

	Standard	Al. 80x80mm		
Front Pillar	to	Al. 100x100mm	€ 88	pcs
		St. 100x100x3mm	€ 155	pcs
		St. 100x100x5mm	€ 377	pcs
		St. 150x150x3mm	€ 502	pcs
		St. 150x150x5mm	€ 870	pcs

COMPACT

Freestanding

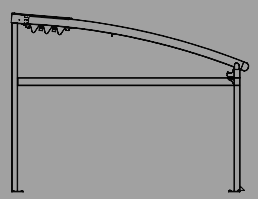

MAXIMUM DIMENSIONS

	WIDTH	PROJECTION
2 RAILS	400 cm	600 cm
3 RAILS	800 cm	600 cm
4 RAILS	1200 cm	600 cm
5 RAILS	1300 cm	600 cm

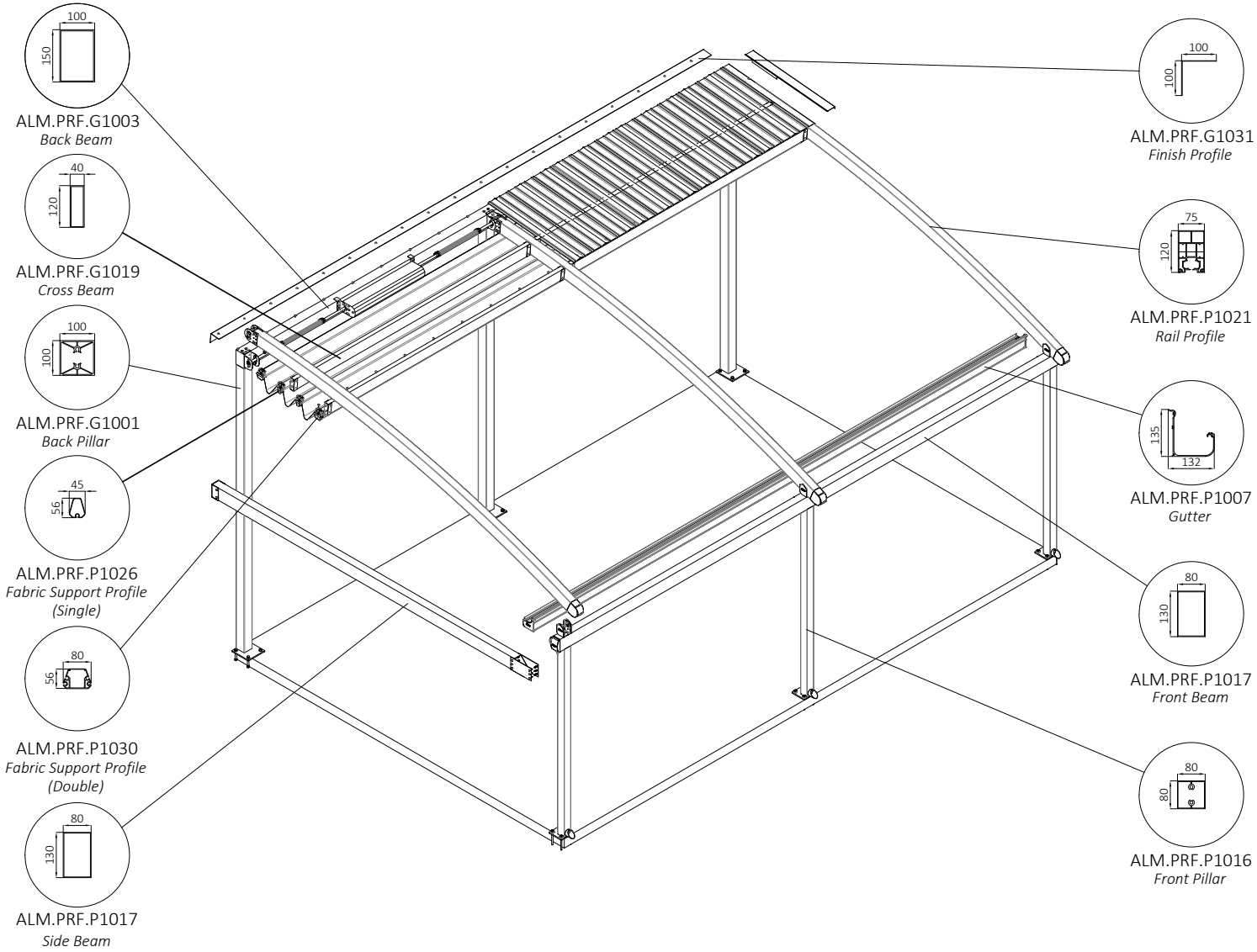

TECHNICAL FEATURES

COLLECTED FABRIC DIMENSIONS

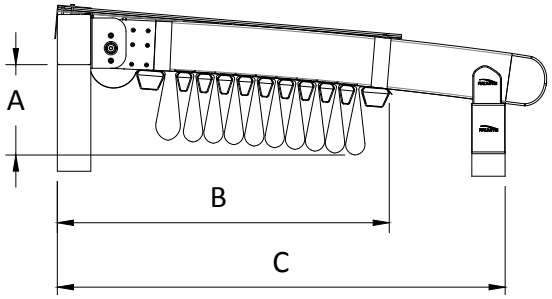

DRAINAGE CALCULATION

Type	Max. m²
COMPACT	30 m²/pc

* per drainage

There should be at least one drainage, each 8 m length gutter.

RADIUS CHART

RADIUS	850	1500	2850

Projection	A			
250	63			
300	83			
350	107			
400	135	82		B
450	168	98		
500		116		
550		137		
600		160	93	

*The values are approx. ± 5 cm

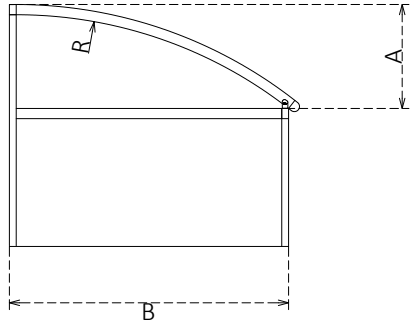

Projection cm

No of Fabric Support Profiles	200	250	300	350	400	450	500	550	600	C
5	31									73
6		32								79
7			33							86
9				35						99
10					36					105
11						37				112
13							39			125
14								40		131
15									41	138
	A									B

*Calculated according to a slope of 15%

WIND RESISTANCE

WIDTH (cm)

	450	500	550	600	650	700	750	800	850	900	950	1000	1050	1100	1150	1200	1250	1300
400	11	11	11	10	10	9	8	8	11	10	10	10	9	9	8	8	10	10
450	11	10	10	9	9	8	7	7	10	9	9	9	8	8	7	7	9	9
500	10	9	9	8	8	7	7	7	9	8	8	8	7	7	7	7	8	8
550	10	9	8	8	8	6	6	6	9	8	8	8	6	6	6	6	8	8
600	9	8	8	7	7	6	6	6	8	7	7	7	6	6	6	6	7	7

All sides open

WIDTH (cm)

PROJECTION (cm)	450	500	550	600	650	700	750	800	850	900	950	1000	1050	1100	1150	1200	1250	1300
400	10	10	10	10	9	8	8	8	10	10	9	9	8	8	8	8	9	9
450	10	10	9	9	9	8	8	7	10	9	9	9	8	8	8	7	9	9
500	9	9	9	9	9	7	7	7	9	9	9	9	7	7	7	7	9	9
550	9	9	9	9	8	7	7	7	9	9	8	8	7	7	7	7	8	8
600	9	9	9	9	8	7	7	7	9	9	8	8	7	7	7	7	8	8

With side enclosure

*The values are given according to the Beaufort scale.

**Calculated for Products with a front height of 250 cm according to Eurocode EN 1991-1-4 Terrain Category 4.

*** You can ask for new calculations for special designs.

CORAL COMPACT Freestanding

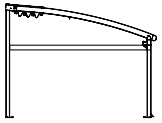

Width / Projection

	2 RAILS				3 RAILS								4 RAILS								5 RAILS		FS4 FS10-C	FS9-C
	250 cm	300 cm	350 cm	400 cm	450 cm	500 cm	550 cm	600 cm	650 cm	700 cm	750 cm	800 cm	850 cm	900 cm	950 cm	1000 cm	1050 cm	1100 cm	1150 cm	1200 cm	1250 cm	1300 cm		
200 cm	€ 4.668	€ 4.874	€ 5.263	€ 5.472	€ 6.668	€ 6.874	€ 7.083	€ 7.289	€ 7.675	€ 7.884	€ 8.125	€ 8.331	€ 9.353	€ 9.555	€ 9.931	€ 10.131	€ 10.329	€ 10.527	€ 10.725	€ 10.923	€ 12.343	€ 12.647	€ 852	€ 124
250 cm	€ 4.874	€ 5.186	€ 5.482	€ 5.697	€ 6.980	€ 7.192	€ 7.508	€ 7.719	€ 8.014	€ 8.225	€ 8.473	€ 8.787	€ 9.895	€ 10.103	€ 10.385	€ 10.590	€ 10.896	€ 11.101	€ 11.305	€ 11.509	€ 13.017	€ 13.324	€ 915	€ 149
300 cm	€ 5.196	€ 5.542	€ 5.867	€ 6.110	€ 7.509	€ 7.753	€ 8.098	€ 8.342	€ 8.665	€ 8.908	€ 9.185	€ 9.529	€ 10.752	€ 10.987	€ 11.303	€ 11.538	€ 11.873	€ 12.105	€ 12.341	€ 12.578	€ 14.196	€ 14.536	€ 978	€ 175
350 cm	€ 5.509	€ 5.762	€ 6.091	€ 6.443	€ 7.930	€ 8.179	€ 8.430	€ 8.780	€ 9.111	€ 9.359	€ 9.645	€ 9.994	€ 11.306	€ 11.548	€ 11.967	€ 12.211	€ 12.452	€ 12.693	€ 13.033	€ 13.273	€ 14.982	€ 15.230	€ 1.041	€ 200
400 cm	€ 5.723	€ 5.980	€ 6.318	€ 6.673	€ 8.252	€ 8.508	€ 8.767	€ 9.121	€ 9.459	€ 9.714	€ 10.004	€ 10.358	€ 11.764	€ 12.011	€ 12.435	€ 12.685	€ 12.934	€ 13.180	€ 13.528	€ 13.772	€ 15.573	€ 15.826	€ 1.103	€ 227
450 cm	€ 5.942	€ 6.206	€ 6.548	€ 6.913	€ 8.581	€ 8.845	€ 9.108	€ 9.468	€ 9.812	€ 10.073	€ 10.371	€ 10.732	€ 12.224	€ 12.480	€ 12.912	€ 13.166	€ 13.419	€ 13.673	€ 14.026	€ 14.279	€ 16.168	€ 16.426	€ 1.167	€ 252
500 cm	€ 6.156	€ 6.425	€ 6.776	€ 7.144	€ 8.905	€ 9.175	€ 9.443	€ 9.811	€ 10.160	€ 10.427	€ 10.730	€ 11.096	€ 12.683	€ 12.943	€ 13.382	€ 13.643	€ 13.902	€ 14.160	€ 14.520	€ 14.780	€ 16.758	€ 17.024	€ 1.230	€ 278
550 cm	€ 6.487	€ 6.885	€ 7.267	€ 7.665	€ 9.541	€ 9.841	€ 10.241	€ 10.527	€ 11.017	€ 11.315	€ 11.648	€ 12.044	€ 13.747	€ 14.137	€ 14.505	€ 14.795	€ 15.186	€ 15.473	€ 15.861	€ 16.151	€ 18.246	€ 18.638	€ 1.293	€ 303
600 cm	€ 6.709	€ 7.113	€ 7.500	€ 7.905	€ 9.871	€ 10.176	€ 10.583	€ 10.888	€ 11.372	€ 11.678	€ 12.016	€ 12.418	€ 14.212	€ 14.605	€ 15.061	€ 15.279	€ 15.675	€ 15.969	€ 16.363	€ 16.660	€ 18.843	€ 19.243	€ 1.356	€ 329
FS3	€ 149	€ 156	€ 170	€ 187	€ 203	€ 218	€ 234	€ 249	€ 265	€ 280	€ 360	€ 376	€ 391	€ 407	€ 423	€ 439	€ 454	€ 470	€ 485	€ 501	€ 516	€ 532		
FS5	€ 27	€ 35	€ 41	€ 46	€ 54	€ 60	€ 67	€ 73	€ 80	€ 86	€ 93	€ 99	€ 106	€ 112	€ 119	€ 125	€ 132	€ 138	€ 145	€ 151	€ 159	€ 165		
FS5-B	€ 38	€ 48	€ 56	€ 64	€ 74	€ 82	€ 92	€ 100	€ 110	€ 118	€ 128	€ 136	€ 146	€ 154	€ 164	€ 172	€ 182	€ 190	€ 200	€ 209	€ 218	€ 227		

Note: If you use an additional rail you have to add a front pillar. It's included in the price.

FS3	Gutter&Downpipe
FS5-A	Additional Fabric Support Profile (Standard)
FS5-E	Additional Fabric Support Profile (3 Axis)
FS4 FS10-C	Additional Rail for COMPACT Series - Al. - 75x120mm Additional Pillar for COMPACT Series - Al. - 80x80mm
FS8	Lighting System
FS9-C	Side Beam for COMPACT Series - Al. - 80x130mm

FS8		LED TYPE & MODULE		
		2 LED	3 LED	4 LED
FS8-S	SPOT	€ 125	€ 152	€ 179
FS8-L	LINEAR	€ 179	€ 233	-
FS8-E	3 AXIS	€ 206	€ 268	-

* FS9 Side Beam is not included in the price
* FS Flexy Plain/3D or Stam 6002 is included in the price
* Motor and Remote control is included in the price
* RAL Colours specified in Aluminium coating catalogue are included in price. Any other RAL colours which are existing in our Supplier's stock can be applied without extra cost.
* Standard colours are RAL9010, RAL7040, RAL1013, RAL7046, RAL9004, RAL3022, RAL120-2, RAL7036, RAL8019, RAL120-5, RAL8025, RAL4001, RAL620-3, RAL5008
* Painting cost has to be min. 125€
* Plastic parts coloured only specified colours

DEDUCTIONS

Price deduction can apply only front pillars, back pillars and side beam. The price of the front pillar, back pillar and side beam can be deducted from options price.

OPTIONS

FS10-C	Extra pillar (80x80mm Al.)	€ 246	pcs
FS10	Extra pillar (100x100mm Al.)	€ 335	pcs
FS10-ST3	Extra pillar (100x100x3mm St.)	€ 401	pcs
FS10-ST5	Extra pillar (100x100x5mm St.)	€ 623	pcs
FS11	Deco ceiling cover	€ 46	m^2
FS12	Izo-Pro ceiling cover (up to 800 cm width)	€ 39	m^2
FS15-C	Side beam pillar (80x80mm - Al)	€ 246	pcs
FS16	Wood effect (*Price difference for standart patterns (up to 700cm projection) (*Can not be applied to steel construction or freestanding products with base plate.)	"10% of product price"	
FS19	Fix louver	€ 46	lm
FS24	W96 Ceiling Cover	€ 53	m^2
FS25	Fabric support profile special color	€ 11	m^2
FS26	Exclusive fabric difference	€ 31	m^2
FS27	3 Axis lighting fabric support profile difference	€ 9	m^2
FS29-1	Sun Sensor (SUNIS) (with Universal Receiver, it's included in the price)	€ 596	pcs
FS29-2	Wind Sensor (EOLIS RTS) (with Universal Receiver, it's included in the price)	€ 367	pcs
FS29-3	Sun and Wind Sensor (SOLIRIS) (with Universal Receiver, it's included in the price)	€ 459	pcs
FS30	CONNEXOON	€246	pcs
FS31-1	Remote Control - PURE - Telis 1	€55	pcs
FS31-4	Remote Control - PURE - Telis 4	€93	pcs
FS31-16	Remote Control - PURE - Telis 16	€264	pcs
FS32-1	Remote Control - PATIO - Telis 1	€76	pcs
FS32-4	Remote Control - PATIO - Telis 4	€123	pcs
FS33-1	Remote Control - LOUNGE - Telis 1	€93	pcs
FS33-4	Remote Control - LOUNGE - Telis 4	€133	pcs
FS34-1	Remote Control - MODULIS PURE - Telis 1	€125	pcs
FS34-4	Remote Control - MODULIS PURE - Telis 4	€192	pcs
FS35-1	Remote Control - MODULIS LOUNGE - Telis 1	€144	pcs
FS35-4	Remote Control - MODULIS LOUNGE - Telis 4	€220	pcs

*** Can't apply a sensor to the single motor product. For further information please contact with PALMIYE**

BACK PILLAR POSITION CHANGE

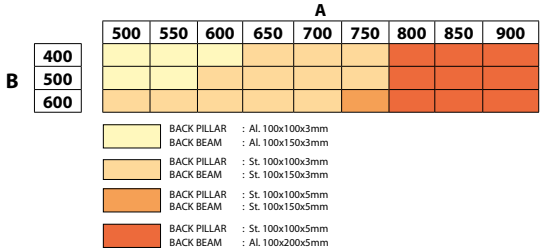

(construction price difference needs to be added)

STANDARD CONSTRUCTION

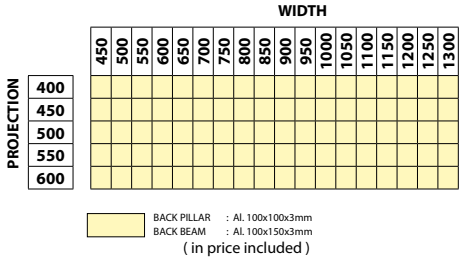

(in price included)

EXTENSIONS

Rail	COMPACT - 75x120mm	€ 128	lm
Beam	Al. 40x120mm	€ 42	lm
Beam	Al. 42x150mm	€ 65	lm
Beam	Al. 50x150mm	€ 115	lm
Beam	Al. 80x130mm	€ 61	lm
Beam	Al. 100x150mm	€ 96	lm
Beam	St. 100x150x3mm	€ 190	lm
Beam	St. 100x150x5mm	€ 246	lm
Beam	St. 100x200x3mm	€ 193	lm
Beam	St. 100x200x5mm	€ 293	lm
Fabric protection cover	Al. - 63x___cm	€ 37	m^2
Gutter	Special Profile	€ 28	lm
Pillar	Al. 80x80mm	€ 56	lm
Pillar	Al. 100x100mm	€ 107	lm
Pillar	St. 100x100x3mm	€ 129	lm
Pillar	St. 100x100x5mm	€ 246	lm
Pillar	St. 150x150x3mm	€ 261	lm
Pillar	St. 150x150x5mm	€ 390	lm

Max. Al. front pillar height is 280 cm
Max. St 3mm front pillar height is 380 cm
Max. St 5mm front pillar height is 480 cm

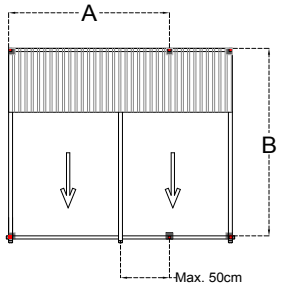

PRICE DIFFERENCE

BEAM GROUP

Back Beam

Standard	Al. 100x150mm		
to	Al. 42x150mm	€ 24	lm
	Al. 50x150mm	€ 74	lm
	Al. 80x130mm	€ 19	lm
	St. 50x150x3mm	€ 86	lm
	St. 50x150x5mm	€ 146	lm
	Al. 100x150mm	€ 54	lm
	St. 100x150x3mm	€ 149	lm
	St. 100x150x5mm	€ 205	lm
	St. 100x200x3mm	€ 152	lm
	St. 100x200x5mm	€ 251	lm

Front Beam

Standard	Al. 80x130mm		
to	Al. 100x150mm	€ 35	lm
	St. 100x150x3mm	€ 130	lm
	St. 100x150x5mm	€ 186	lm
	St. 100x200x3mm	€ 133	lm
	St. 100x200x5mm	*€ 233*	*lm*

PILLAR GROUP

Back Pillar

Standard	Al. 100x100mm		
to	St. 100x100x3mm	€ 66	pcs
	St. 100x100x5mm	€ 289	pcs
	St. 150x150x3mm	€ 414	pcs
	St. 150x150x5mm	€ 781	pcs

Front Pillar

Standard	Al. 80x80mm		
to	Al. 100x100mm	€ 88	pcs
	St. 100x100x3mm	€ 155	pcs
	St. 100x100x5mm	€ 377	pcs
	St. 150x150x3mm	€ 502	pcs
	St. 150x150x5mm	€ 870	pcs

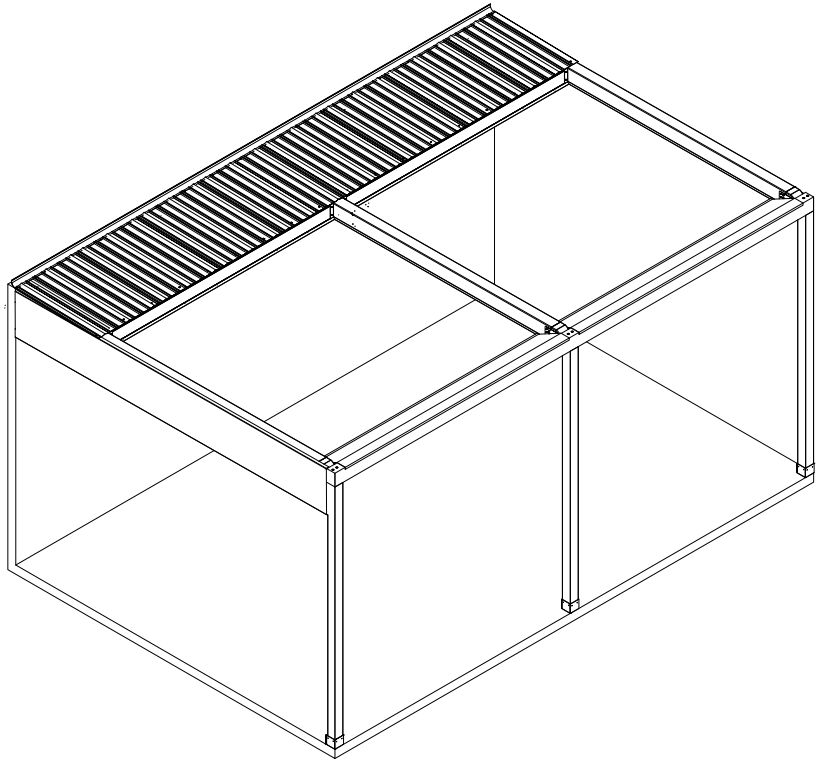

SATIN

I N D E X

PRODUCT FORMS

- **SATIN PLUS** Wall / Ceiling Installation

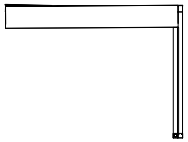

- **SATIN PLUS** Freestanding

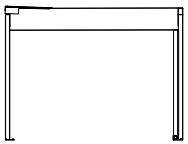

PLUS
Wall / Ceiling

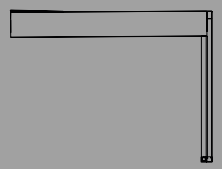

MAXIMUM DIMENSIONS

	WIDTH	PROJECTION
2 RAILS	450 cm	800 cm
3 RAILS	900 cm	800 cm

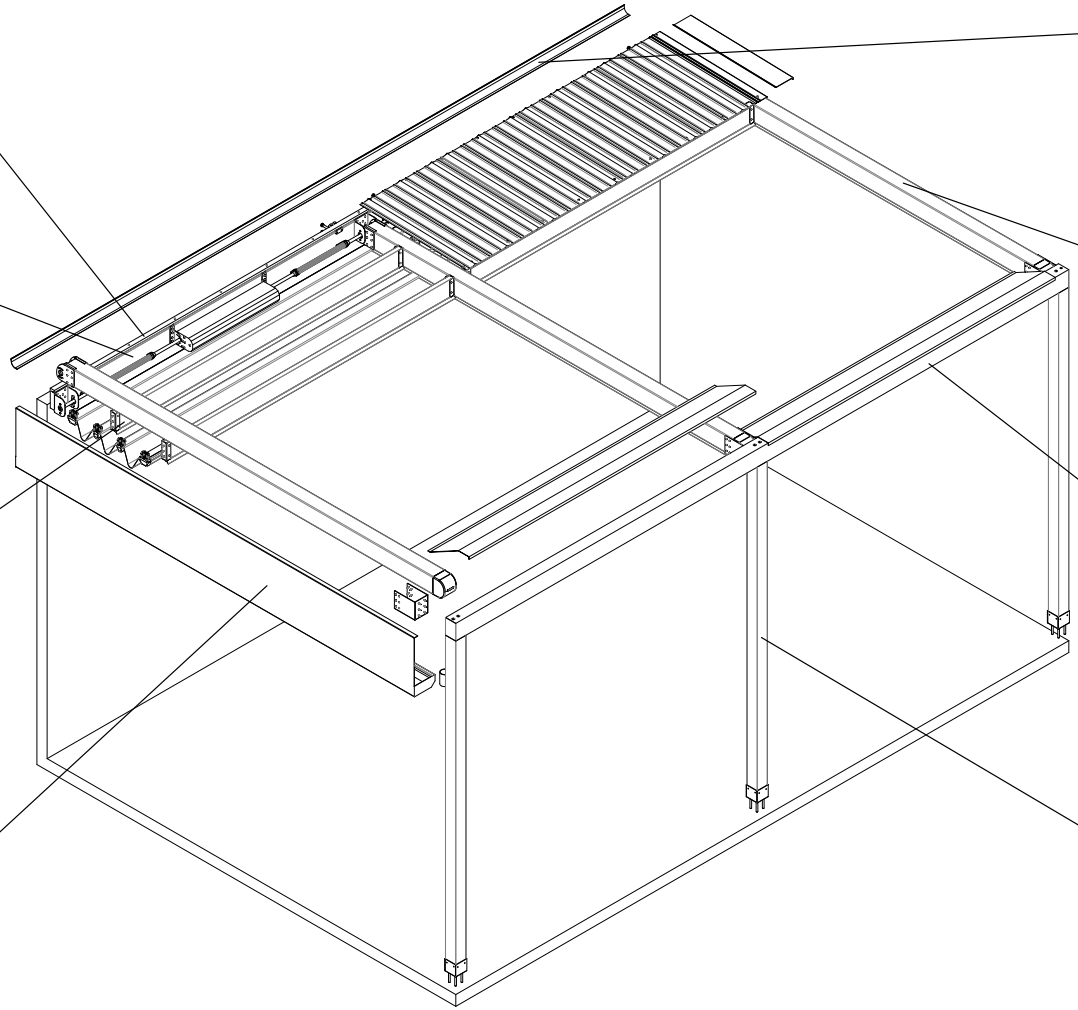

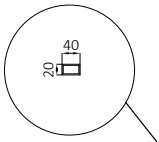

DMR.PRF.G1007
Elevation Profile

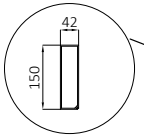

ALM.PRF.G1012
Back Beam

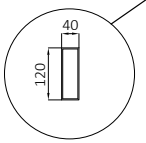

ALM.PRF.G1019
Cross Beam

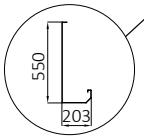

ALM.PRF.G4017
Trapezium Gutter

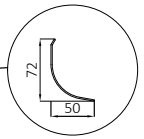

ALM.PRF.G1011
Wall Finish

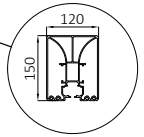

ALM.PRF.P1003
Rail Profile

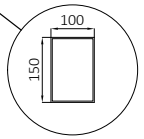

ALM.PRF.G1003
Front Beam

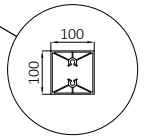

ALM.PRF.G1001
Front Pillar

TECHNICAL FEATURES

COLLECTED FABRIC DIMENSIONS

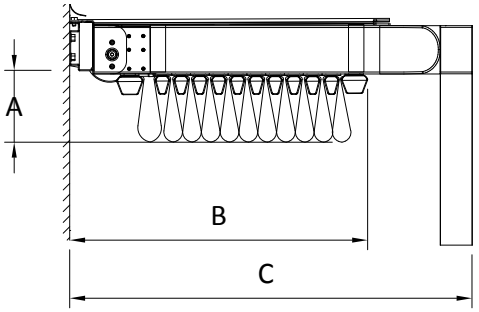

Projection cm

No of Fabric Support Profiles	183	233	283	332	382	432	481	531	581	630	680	730	779	C
4	25													61
5		25												68
6			25											74
8				25										87
9					25									94
10						25								100
11							25							107
12								25						113
13									25					120
15										25				133
17											25			146
18													25	152

A B

*Calculated according to a slope of 15%

WIND RESISTANCE

WIDTH (cm)

PROJECTION (cm)	450	500	550	600	650	700	750	800	850	900
400	11	11	11	11	11	11	11	11	11	11
450	11	11	11	11	11	11	11	11	10	10
500	11	11	11	11	11	10	10	10	10	9
550	11	11	11	10	10	10	9	9	9	9
600	11	10	10	10	10	9	9	9	8	8
650	10	10	9	9	9	9	9	8	8	8
700	10	9	9	9	9	8	8	8	8	8
750	9	9	8	8	8	8	8	7	7	7
800	9	8	8	8	8	7	7	7	7	7

All sides open

WIDTH (cm)

PROJECTION (cm)	450	500	550	600	650	700	750	800	850	900
400	11	11	10	10	9	9	9	9	8	8
450	11	10	10	10	9	9	9	9	8	8
500	10	10	10	10	9	9	9	9	8	8
550	10	10	10	10	9	9	9	9	8	8
600	10	9	9	9	9	9	9	9	8	8
650	9	9	9	9	9	9	9	8	8	8
700	9	9	9	9	9	9	9	8	8	8
750	9	9	9	9	8	8	8	8	8	8
800	8	8	8	8	8	8	8	8	8	8

With side enclosure

*The values are given according to the Beaufort scale.

**Calculated for Products with a front height of 250 cm according to Eurocode EN 1991-1-4 Terrain Category 4.

*** You can ask for new calculations for special designs.

DRAINAGE CALCULATION

Type	Max. m^2
Full	39 m^2/pc

* per drainage

SATIN

PLUS Wall / Ceiling

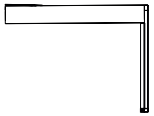

Width

Projection

	2 RAILS					3 RAILS									FS4	FS21
	250 cm	300 cm	350 cm	400 cm	450 cm	500 cm	550 cm	600 cm	650 cm	700 cm	750 cm	800 cm	850 cm	900 cm		
200 cm	€ 4.890	€ 5.128	€ 5.463	€ 5.804	€ 6.043	€ 7.098	€ 7.331	€ 7.564	€ 8.005	€ 8.201	€ 8.363	€ 8.594	€ 8.825	€ 9.057	€ 734	€ 246
250 cm	€ 5.105	€ 5.471	€ 5.797	€ 6.045	€ 6.288	€ 7.446	€ 7.814	€ 8.052	€ 8.378	€ 8.582	€ 8.753	€ 9.118	€ 9.484	€ 9.596	€ 811	€ 306
300 cm	€ 5.481	€ 5.891	€ 6.258	€ 6.548	€ 6.836	€ 8.142	€ 8.554	€ 8.838	€ 9.206	€ 9.449	€ 9.665	€ 10.072	€ 10.484	€ 10.641	€ 887	€ 368
350 cm	€ 5.823	€ 6.120	€ 6.496	€ 6.914	€ 7.209	€ 8.625	€ 8.920	€ 9.339	€ 9.718	€ 9.964	€ 10.189	€ 10.607	€ 11.032	€ 11.191	€ 963	€ 429
400 cm	€ 6.047	€ 6.351	€ 6.736	€ 7.161	€ 7.465	€ 8.983	€ 9.286	€ 9.713	€ 10.098	€ 10.355	€ 10.588	€ 11.014	€ 11.441	€ 11.615	€ 1.040	€ 491
450 cm	€ 6.276	€ 6.588	€ 6.982	€ 7.415	€ 7.727	€ 9.352	€ 9.664	€ 10.100	€ 10.493	€ 10.757	€ 10.999	€ 11.432	€ 11.869	€ 12.050	€ 1.116	€ 552
500 cm	€ 6.500	€ 6.821	€ 7.222	€ 7.664	€ 7.985	€ 9.713	€ 10.031	€ 10.475	€ 10.881	€ 11.148	€ 11.398	€ 11.840	€ 12.288	€ 12.475	€ 1.192	€ 614
550 cm	€ 6.887	€ 7.370	€ 7.813	€ 8.297	€ 8.659	€ 10.550	€ 11.040	€ 11.401	€ 11.976	€ 12.284	€ 12.578	€ 13.065	€ 13.556	€ 13.914	€ 1.269	€ 675
600 cm	€ 7.120	€ 7.611	€ 8.064	€ 8.555	€ 8.925	€ 10.920	€ 11.420	€ 11.790	€ 12.372	€ 12.687	€ 12.988	€ 13.485	€ 13.984	€ 14.351	€ 1.345	€ 737
650 cm	€ 7.347	€ 7.847	€ 8.307	€ 8.806	€ 9.186	€ 11.285	€ 11.793	€ 12.172	€ 12.762	€ 13.029	€ 13.336	€ 13.838	€ 14.339	€ 14.717	€ 1.421	€ 798
700 cm	€ 7.575	€ 8.083	€ 8.549	€ 9.058	€ 9.445	€ 11.651	€ 12.166	€ 12.555	€ 13.154	€ 13.424	€ 13.742	€ 14.252	€ 14.766	€ 15.146	€ 1.497	€ 858
750 cm	€ 7.804	€ 8.320	€ 8.795	€ 9.310	€ 9.705	€ 12.016	€ 12.540	€ 12.936	€ 13.545	€ 13.821	€ 14.144	€ 14.663	€ 15.185	€ 15.576	€ 1.574	€ 920
800 cm	€ 8.189	€ 8.749	€ 9.265	€ 9.823	€ 10.262	€ 12.726	€ 13.294	€ 13.734	€ 14.387	€ 14.700	€ 15.069	€ 15.630	€ 16.194	€ 16.632	€ 1.650	€ 981

FS5-A	€ 27	€ 35	€ 41	€ 46	€ 54	€ 60	€ 67	€ 73	€ 80	€ 86	€ 93	€ 99	€ 106	€ 112
FS5-E	€ 38	€ 48	€ 56	€ 64	€ 74	€ 82	€ 92	€ 100	€ 110	€ 118	€ 128	€ 136	€ 146	€ 154

FS5-A	Additional Fabric Support Profile (Standard)
FS5-E	Additional Fabric Support Profile (3 Axis)
FS4	Additional Rail for PLUS Series - Al. - 120x150mm
FS8	Lighting System
FS21	Trapezium Gutter

FS8		LED TYPE & MODULE		
		2 LED	3 LED	4 LED
FS8-S	SPOT	€ 125	€ 152	€ 179
FS8-L	LINEAR	€ 179	€ 233	-
FS8-E	3 AXIS	€ 206	€ 268	-

* FS9 Side Beam is not included in the price
* FS Flexy Plain/3D or Stam 6002 is included in the price
* Motor and Remote control is included in the price
* RAL Colours specified in Aluminium coating catalogue are included in price. Any other RAL colours which are existing in our Supplier's stock can be applied without extra cost.
* Standard colours are RAL9010, RAL7040, RAL1013, RAL7046, RAL9004, RAL3022, RAL120-2, RAL7036, RAL8019, RAL120-5, RAL8025, RAL4001, RAL620-3, RAL5008
* Painting cost has to be min. 125€
* Plastic parts coloured only specified colours

DEDUCTIONS

Price deduction can apply only front pillars, back pillars and side beam. The price of the front pillar, back pillar and side beam can be deducted from options price.

OPTIONS

FS6	Trapezium ceiling cover (up to 900 cm width)	€ 58	m^2
FS10	Extra pillar (100x100mm Al.)	€ 335	pcs
FS10-ST3	Extra pillar (100x100x3mm St.)	€ 401	pcs
FS10-ST5	Extra pillar (100x100x5mm St.)	€ 623	pcs
FS11	Deco ceiling cover	€ 46	m^2
FS13-A	Wavy ceiling cover (for flexy fabric) (up to 350 cm width)	€ 24	m^2
FS15	Side beam pillar (50x100mm - Al)	€ 174	pcs
FS15-B	Side beam pillar (100x100mm - Al)	€ 335	pcs
FS16	Wood effect (*Price difference for standart patterns (up to 700cm projection) (*Can not be applied to steel construction or freestanding products with base plate.)	10% of product price	
FS19	Fix louver	€ 46	lm
FS23	External Square Downpipe	€ 205	pcs
FS24	W96 Ceiling Cover	€ 53	m^2
FS25	Fabric support profile special color	€ 11	m^2
FS27	3 Axis lighting fabric support profile difference	€ 9	m^2
FS29-1	Sun Sensor (SUNIS) (with Universal Receiver, it's included in the price)	€ 596	pcs
FS29-2	Wind Sensor (EOLIS RTS) (with Universal Receiver, it's included in the price)	€ 367	pcs
FS29-3	Sun and Wind Sensor (SOLIRIS) (with Universal Receiver, it's included in the price)	€ 459	pcs
FS30	CONNEXOON	€246	pcs
FS31-1	Remote Control - PURE - Telis 1	€55	pcs
FS31-4	Remote Control - PURE - Telis 4	€93	pcs
FS31-16	Remote Control - PURE - Telis 16	€264	pcs
FS32-1	Remote Control - PATIO - Telis 1	€76	pcs
FS32-4	Remote Control - PATIO - Telis 4	€123	pcs
FS33-1	Remote Control - LOUNGE - Telis 1	€93	pcs
FS33-4	Remote Control - LOUNGE - Telis 4	€133	pcs
FS34-1	Remote Control - MODULIS PURE - Telis 1	€125	pcs
FS34-4	Remote Control - MODULIS PURE - Telis 4	€192	pcs
FS35-1	Remote Control - MODULIS LOUNGE - Telis 1	€144	pcs
FS35-4	Remote Control - MODULIS LOUNGE - Telis 4	€220	pcs

*** Can't apply a sensor to the single motor product. For further information please contact with PALMIYE**

EXTENSIONS

Rail	PLUS - 120x150mm	€ 209	lm
Beam	Al. 42x150mm	€ 65	lm
Beam	Al. 50x150mm	€ 115	lm
Beam	Al. 100x150mm	€ 96	lm
Beam	St. 100x150x3mm	€ 190	lm
Beam	St. 100x150x5mm	€ 246	lm
Beam	St. 100x200x3mm	€ 193	lm
Beam	St. 100x200x5mm	€ 293	lm
Fabric protection cover	Al. - 63x___cm	€ 37	m^2
Gutter	Special Profile	€ 28	lm
Pillar	Al. 100x100mm	€ 107	lm
Pillar	St. 100x100x3mm	€ 129	lm
Pillar	St. 100x100x5mm	€ 246	lm
Pillar	St. 150x150x3mm	€ 261	lm
Pillar	St. 150x150x5mm	€ 390	lm

Max. Al. front pillar height is 280 cm
Max. St 3mm front pillar height is 380 cm
Max. St 5mm front pillar height is 480 cm

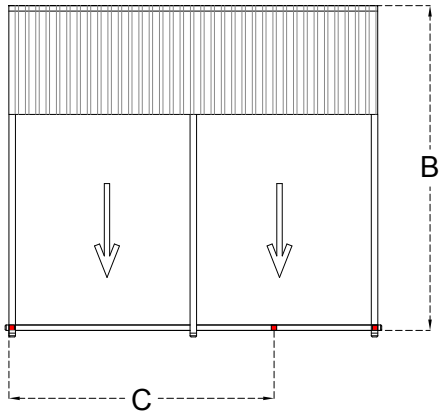

PRICE DIFFERENCE

BEAM GROUP

Back Beam

Standard	Al. 42x150mm		
to	Al. 50x150mm	€ 50	lm
	St. 50x150x3mm	€ 62	lm
	St. 50x150x5mm	€ 122	lm
	Al. 100x150mm	€ 30	lm
	St. 100x150x3mm	€ 125	lm
	St. 100x150x5mm	€ 181	lm
	St. 100x200x3mm	€ 128	lm
	St. 100x200x5mm	€ 228	lm

Front Beam

Standard	Al. 100x150mm		
to	St. 100x150x3mm	€ 95	lm
	St. 100x150x5mm	€ 151	lm
	St. 100x200x3mm	€ 98	lm
	St. 100x200x5mm	€ 197	lm

PILLAR GROUP

Front Pillar

Standard	Al. 100x100mm		
to	St. 100x100x3mm	€ 66	pcs
	St. 100x100x5mm	€ 289	pcs
	St. 150x150x3mm	€ 414	pcs
	St. 150x150x5mm	€ 781	pcs

FRONT PILLAR POSITION CHANGE

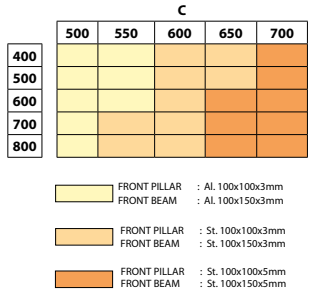

(construction price difference needs to be added)

PLUS
Freestanding

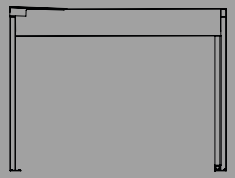

MAXIMUM DIMENSIONS

	WIDTH	PROJECTION
2 RAILS	450 cm	800 cm
3 RAILS	900 cm	800 cm

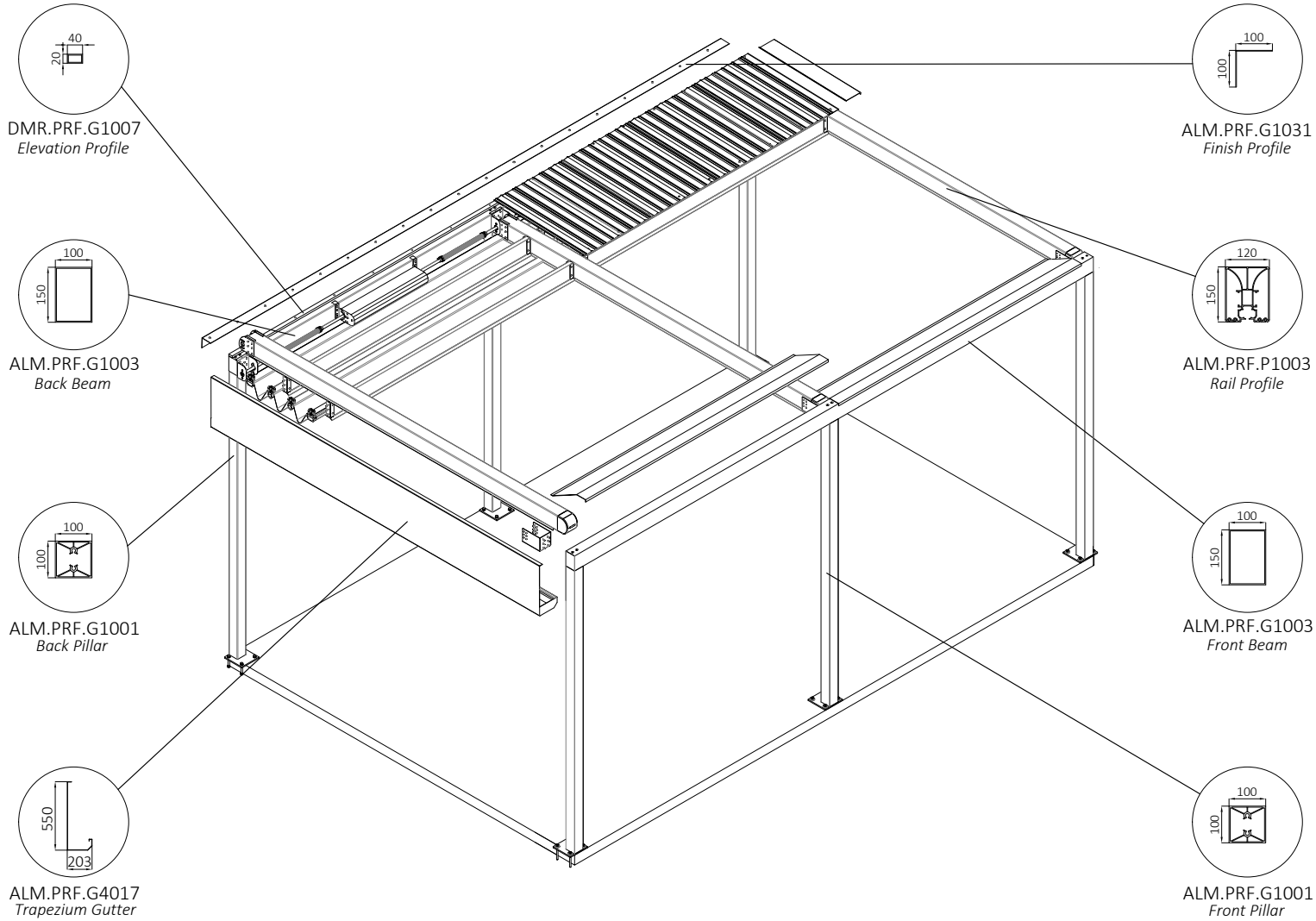

TECHNICAL FEATURES

COLLECTED FABRIC DIMENSIONS

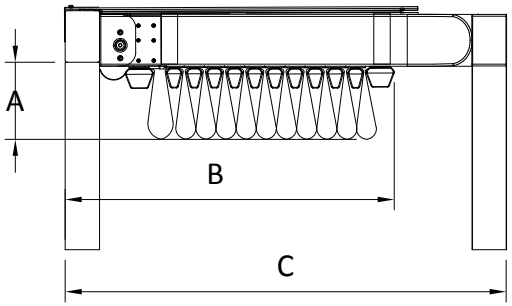

Projection cm

No of Fabric Support Profiles	183	233	283	332	382	432	481	531	581	630	680	730	779	C
4	25													66
5		25												73
6			25											79
8				25										92
9					25									99
10						25								105
11							25							112
12								25						118
13									25					125
14										25				131
17											25			151
18												25		157
						A								B

*Calculated according to a slope of 15%

WIND RESISTANCE

WIDTH (cm)

PROJECTION (cm)	450	500	550	600	650	700	750	800	850	900
400	11	11	11	11	11	10	10	10	10	9
450	11	11	11	11	10	10	10	9	9	9
500	11	11	10	10	10	10	9	9	9	8
550	11	11	10	10	10	9	9	9	8	8
600	10	10	10	10	9	9	8	8	8	8
650	10	10	9	9	9	8	8	8	8	8
700	9	9	9	9	8	8	8	8	8	8
750	9	9	8	8	8	8	8	8	8	8
800	8	8	8	8	8	8	8	8	8	8

All sides open

WIDTH (cm)

PROJECTION (cm)	450	500	550	600	650	700	750	800	850	900
400	11	10	10	9	9	9	9	9	8	8
450	11	10	10	9	9	9	9	9	8	8
500	10	10	9	9	9	9	9	9	8	8
550	10	9	9	9	9	9	9	8	8	8
600	9	9	9	9	9	9	8	8	8	8
650	9	9	9	9	9	8	8	8	8	8
700	9	9	9	8	8	8	8	8	8	8
750	8	8	8	8	8	8	8	8	8	8
800	8	8	8	8	8	8	8	8	8	8

With side enclosure

*The values are given according to the Beaufort scale.

**Calculated for Products with a front height of 250 cm according to Eurocode EN 1991-1-4 Terrain Category 4.

*** You can ask for new calculations for special designs.

DRAINAGE CALCULATION

Type	Max. m²
Full	39 m²/pc

* per drainage

SATIN PLUS Freestanding

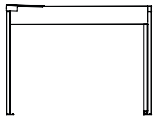

Width

Projection

	2 RAILS					3 RAILS									FS4	FS21
	250 cm	300 cm	350 cm	400 cm	450 cm	500 cm	550 cm	600 cm	650 cm	700 cm	750 cm	800 cm	850 cm	900 cm		
200 cm	€ 5.707	€ 5.962	€ 6.312	€ 6.669	€ 6.924	€ 8.364	€ 8.613	€ 8.862	€ 9.319	€ 9.531	€ 9.708	€ 9.955	€ 10.202	€ 10.450	€ 734	€ 246
250 cm	€ 5.922	€ 6.304	€ 6.646	€ 6.910	€ 7.169	€ 8.711	€ 9.096	€ 9.350	€ 9.691	€ 9.911	€ 10.098	€ 10.479	€ 10.861	€ 10.988	€ 811	€ 306
300 cm	€ 6.299	€ 6.724	€ 7.107	€ 7.413	€ 7.717	€ 9.408	€ 9.836	€ 10.136	€ 10.519	€ 10.779	€ 11.010	€ 11.433	€ 11.861	€ 12.034	€ 887	€ 368
350 cm	€ 6.641	€ 6.953	€ 7.345	€ 7.779	€ 8.089	€ 9.891	€ 10.202	€ 10.636	€ 11.031	€ 11.294	€ 11.535	€ 11.968	€ 12.409	€ 12.584	€ 963	€ 429
400 cm	€ 6.865	€ 7.185	€ 7.585	€ 8.026	€ 8.346	€ 10.249	€ 10.568	€ 11.010	€ 11.412	€ 11.685	€ 11.933	€ 12.375	€ 12.818	€ 13.008	€ 1.040	€ 491
450 cm	€ 7.094	€ 7.422	€ 7.831	€ 8.280	€ 8.608	€ 10.618	€ 10.946	€ 11.397	€ 11.807	€ 12.086	€ 12.344	€ 12.793	€ 13.246	€ 13.442	€ 1.116	€ 552
500 cm	€ 7.318	€ 7.655	€ 8.071	€ 8.529	€ 8.866	€ 10.979	€ 11.313	€ 11.773	€ 12.194	€ 12.477	€ 12.743	€ 13.201	€ 13.665	€ 13.868	€ 1.192	€ 614
550 cm	€ 7.705	€ 8.204	€ 8.662	€ 9.162	€ 9.540	€ 11.816	€ 12.322	€ 12.698	€ 13.289	€ 13.613	€ 13.923	€ 14.426	€ 14.933	€ 15.307	€ 1.269	€ 675
600 cm	€ 7.938	€ 8.445	€ 8.914	€ 9.420	€ 9.806	€ 12.186	€ 12.702	€ 13.088	€ 13.686	€ 14.016	€ 14.334	€ 14.846	€ 15.361	€ 15.744	€ 1.345	€ 737
650 cm	€ 8.164	€ 8.680	€ 9.156	€ 9.671	€ 10.067	€ 12.551	€ 13.075	€ 13.470	€ 14.075	€ 14.359	€ 14.681	€ 15.199	€ 15.716	€ 16.700	€ 1.421	€ 798
700 cm	€ 8.392	€ 8.916	€ 9.398	€ 9.923	€ 10.326	€ 12.917	€ 13.447	€ 13.853	€ 14.468	€ 14.754	€ 15.087	€ 15.613	€ 16.706	€ 17.130	€ 1.497	€ 858
750 cm	€ 8.621	€ 9.153	€ 9.644	€ 10.175	€ 10.586	€ 13.281	€ 13.821	€ 14.233	€ 14.859	€ 15.150	€ 15.490	€ 16.560	€ 17.125	€ 17.559	€ 1.574	€ 920
800 cm	€ 9.007	€ 9.582	€ 10.114	€ 10.688	€ 11.143	€ 13.992	€ 14.576	€ 15.031	€ 16.597	€ 17.459	€ 17.923	€ 18.579	€ 19.239	€ 19.772	€ 1.650	€ 981
FS5-A	€ 27	€ 35	€ 41	€ 46	€ 54	€ 60	€ 67	€ 73	€ 80	€ 86	€ 93	€ 99	€ 106	€ 112		
FS5-E	€ 38	€ 48	€ 56	€ 64	€ 74	€ 82	€ 92	€ 100	€ 110	€ 118	€ 128	€ 136	€ 146	€ 154		

FS5-A	Additional Fabric Support Profile (Standard)
FS5-E	Additional Fabric Support Profile (3 Axis)
FS4	Additional Rail for PLUS Series - Al. - 120x150mm
FS8	Lighting System
FS21	Additional Rail for PLUS Series - Al. - 120x150mm
FS8	Trapezium Gutter

FS8	
FS8-S	SPOT
FS8-L	LINEAR
FS8-E	3 AXIS

LED TYPE & MODULE		
2 LED	3 LED	4 LED
€ 125	€ 152	€ 179
€ 179	€ 233	-
€ 206	€ 268	-

* FS9 Side Beam is not included in the price
* FS Flexy Plain/3D or Stam 6002 is included in the price
* Motor and Remote control is included in the price
* RAL Colours specified in Aluminium coating catalogue are included in price. Any other RAL colours which are existing in our Supplier's stock can be applied without extra cost.
* Standard colours are RAL9010, RAL7040, RAL1013, RAL7046, RAL9004, RAL3022, RAL120-2, RAL7036, RAL8019, RAL120-5, RAL8025, RAL4001, RAL620-3, RAL5008
* Painting cost has to be min. 125€
* Plastic parts coloured only specified colours

DEDUCTIONS

Price deduction can apply only front pillars, back pillars and side beam. The price of the front pillar, back pillar and side beam can be deducted from options price.

OPTIONS

FS6	Trapezium ceiling cover (up to 900 cm width)	€ 58	m^2
FS10	Extra pillar (100x100mm Al.)	€ 335	pcs
FS10-ST3	Extra pillar (100x100x3mm St.)	€ 401	pcs
FS10-ST5	Extra pillar (100x100x5mm St.)	€ 623	pcs
FS11	Deco ceiling cover	€ 46	m^2
FS13-A	Wavy ceiling cover (for flexy fabric) (up to 350 cm width)	€ 24	m^2
FS15	Side beam pillar (50x100mm - Al)	€ 174	pcs
FS15-B	Side beam pillar (100x100mm - Al)	€ 335	pcs
FS16	Wood effect (*Price difference for standart patterns (up to 700cm projection) (*Can not be applied to steel construction or freestanding products with base plate.)	10% of product price	
FS19	Fix louver	€ 46	lm
FS23	External Square Downpipe	€ 205	pcs
FS24	W96 Ceiling Cover	€ 53	m^2
FS25	Fabric support profile special color	€ 11	m^2
FS26	Exclusive fabric difference	€ 31	m^2
FS27	3 Axis lighting fabric support profile difference	€ 9	m^2
FS29-1	Sun Sensor (SUNIS) (with Universal Receiver, it's included in the price)	€ 596	pcs
FS29-2	Wind Sensor (EOLIS RTS) (with Universal Receiver, it's included in the price)	€ 367	pcs
FS29-3	Sun and Wind Sensor (SOLIRIS) (with Universal Receiver, it's included in the price)	€ 459	pcs
FS30	CONNEXOON	€246	pcs
FS31-1	Remote Control - PURE - Telis 1	€55	pcs
FS31-4	Remote Control - PURE - Telis 4	€93	pcs
FS31-16	Remote Control - PURE - Telis 16	€264	pcs
FS32-1	Remote Control - PATIO - Telis 1	€76	pcs
FS32-4	Remote Control - PATIO - Telis 4	€123	pcs
FS33-1	Remote Control - LOUNGE - Telis 1	€93	pcs
FS33-4	Remote Control - LOUNGE - Telis 4	€133	pcs
FS34-1	Remote Control - MODULIS PURE - Telis 1	€125	pcs
FS34-4	Remote Control - MODULIS PURE - Telis 4	€192	pcs
FS35-1	Remote Control - MODULIS LOUNGE - Telis 1	€144	pcs
FS35-4	Remote Control - MODULIS LOUNGE - Telis 4	€220	pcs

*** Can't apply a sensor to the single motor product. For further information please contact with PALMIYE**

BACK PILLAR POSITION CHANGE

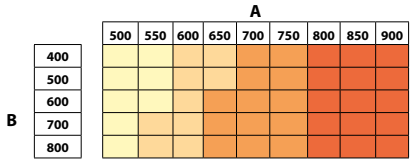

BACK PILLAR : Al. 100x100x3mm
BACK BEAM : Al. 100x150x3mm

BACK PILLAR : St. 100x100x3mm
BACK BEAM : St. 100x150x3mm

BACK PILLAR : St. 100x100x5mm
BACK BEAM : St. 100x150x5mm

BACK PILLAR : St. 100x100x5mm
BACK BEAM : Al. 100x200x5mm

(construction price difference needs to be added)

FRONT PILLAR POSITION CHANGE

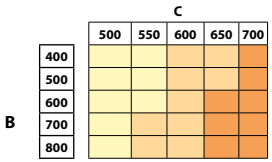

FRONT PILLAR : Al. 100x100x3mm
FRONT BEAM : Al.100x150x3mm

FRONT PILLAR : St. 100x100x3mm
FRONT BEAM : St. 100x150x3mm

FRONT PILLAR : St. 100x100x5mm
FRONT BEAM : St. 100x150x5mm

(construction price difference needs to be added)

STANDARD CONSTRUCTION

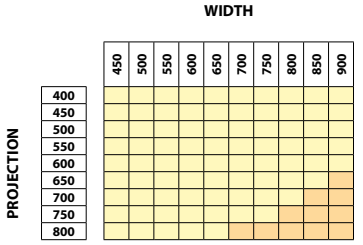

FRONT & BACK PILLAR : Al. 100x100x3mm
FRONT & BACK BEAM : Al. 100X150X3mm

FRONT & BACK PILLAR : St. 100x100x3mm
FRONT & BACK BEAM : St. 100x150x3mm

(in price included)

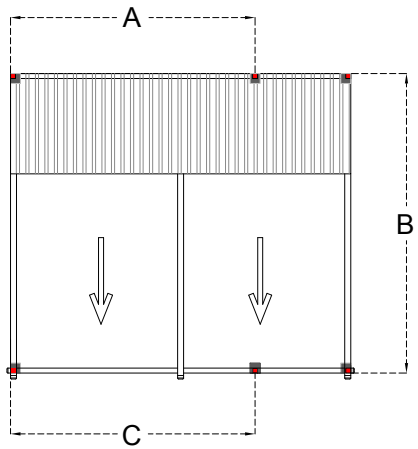

EXTENSIONS

Rail	PLUS - 120x150mm	€ 209	lm
Beam	Al. 100x150mm	€ 96	lm
Beam	St. 100x150x3mm	€ 190	lm
Beam	St. 100x150x5mm	€ 246	lm
Beam	St. 100x200x3mm	€ 193	lm
Beam	St. 100x200x5mm	€ 293	lm
Fabric protection cover	Al. - 63x___cm	€ 37	m^2
Gutter	Special Profile	€ 28	lm
Pillar	Al. 100x100mm	€ 107	lm
Pillar	St. 100x100x3mm	€ 129	lm
Pillar	St. 100x100x5mm	€ 246	lm
Pillar	St. 150x150x3mm	€ 261	lm
Pillar	St. 150x150x5mm	€ 390	lm

Max. Al. front pillar height is 280 cm
Max. St 3mm front pillar height is 380 cm
Max. St 5mm front pillar height is 480 cm

PRICE DIFFERENCE

	BEAM GROUP			
	Standard	**Al. 100x150mm**		
Beam	to	St. 100x150x3mm	€ 95	lm
		St. 100x150x5mm	€ 151	lm
		St. 100x200x3mm	€ 98	lm
		St. 100x200x5mm	€ 197	lm
	PILLAR GROUP			
	Standard	**Al. 100x100mm**		
Pillar	to	St. 100x100x3mm	€ 66	pcs
		St. 100x100x5mm	€ 289	pcs
		St. 150x150x3mm	€ 414	pcs
		St. 150x150x5mm	€ 781	pcs

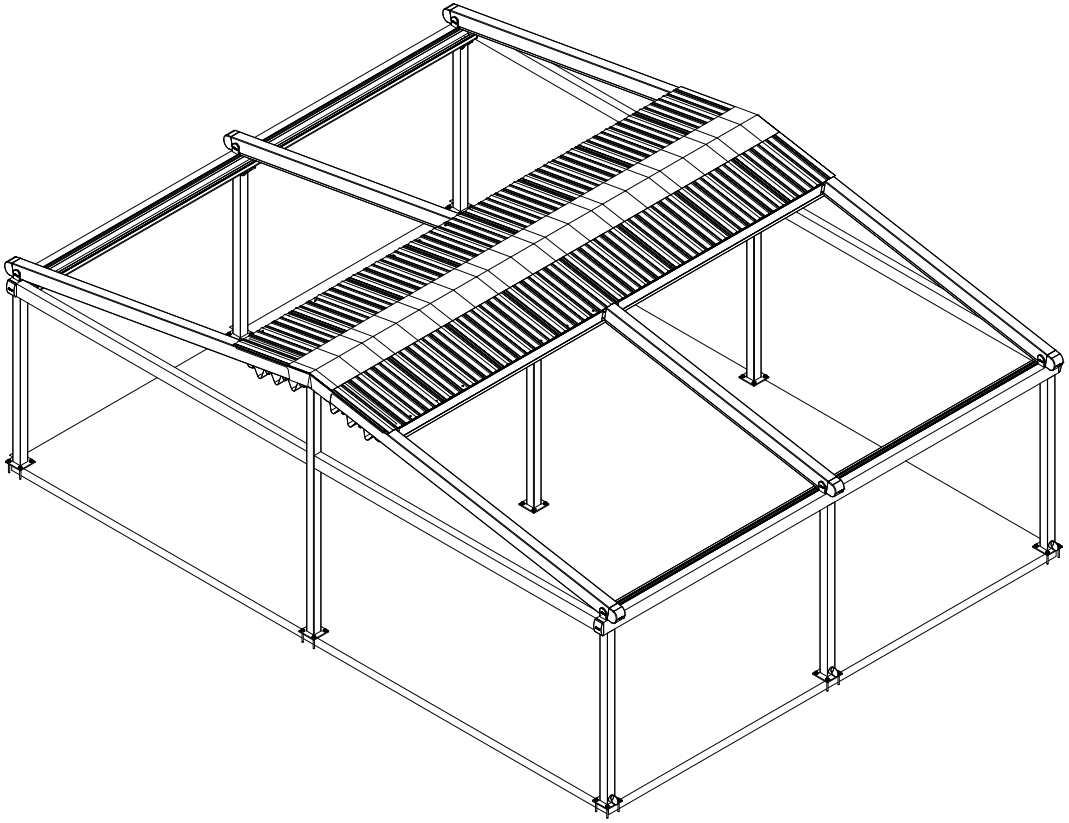

GALA

I N D E X

PRODUCT FORMS

- **GALA PLUS** Twin Without Middle Pillar

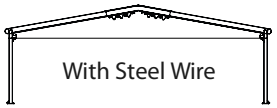

- **GALA PLUS** Twin

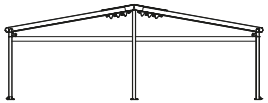

- **GALA COMPACT** Twin

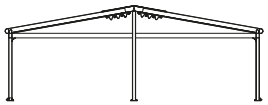

PLUS

Twin Without Middle Pillar

With Steel Wire

MAXIMUM DIMENSIONS

	WIDTH	PROJECTION
2 RAILS	450 cm	1000 cm
3 RAILS	900 cm	1000 cm
4 RAILS	1300 cm	700 cm

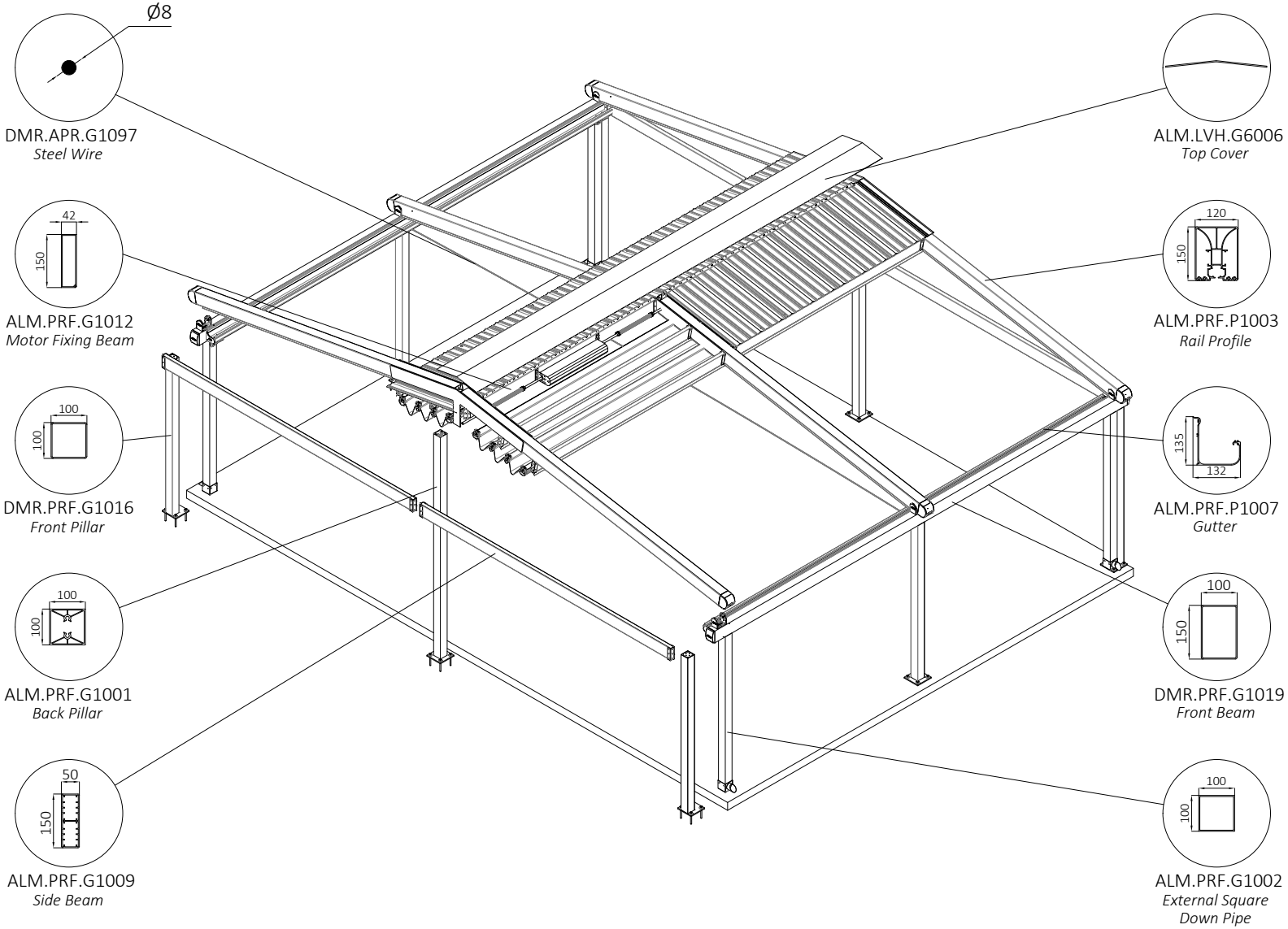

TECHNICAL FEATURES

COLLECTED FABRIC DIMENSIONS

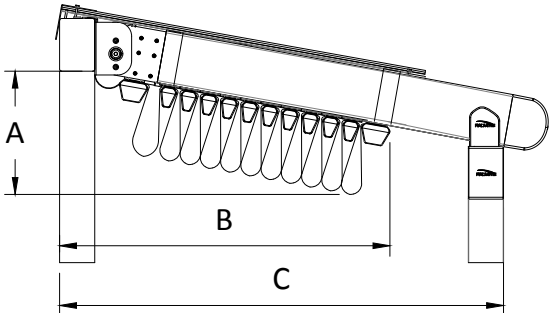

No of Fabric Support Profiles	Projection cm							
	185	235	284	334	383	433	482	C
4	34							61
5		35						68
6			36					74
7				37				81
8					38			87
9						39		94
10							40	100
				A				B

*Calculated according to a slope of 15%

DRAINAGE CALCULATION

Type	Max. m²
Full	39 m²/pc
Half	18 m²/pc

* per drainage

There should be at least one drainage, each 8 m length gutter.

MINIMUM SLOPE CHART

Slope	6,4-7,9%	7,4-8,8%	8,4-9,7%	9,4-10,8%	10,4-12%	11,2-12,7%	12-13,4%	13-14,5%	14-15,7%	15-16,6%	16-17,6%
Projection / Rail Center	**200**	**225**	**250**	**275**	**300**	**325**	**350**	**375**	**400**	**425**	**450**
250	16	19	21	24	26	28	30	33	35	38	40
300	20	23	26	29	31	34	37	40	42	45	48
350	23	27	30	34	37	40	43	46	49	53	56
400	27	31	35	39	42	46	49	53	57	61	64
450	32	36	40	44	48	52	56	60	64	69	73
500	36	41	45	50	54	59	63	68	72	77	81
600	44	50	55	61	66	72	77	83	88	94	99

*Note: Max. slope can be up to 20%

For back height of system 30 cm should be added to slope value.

WIND RESISTANCE

WIDTH (cm)

PROJECTION (cm)	450	500	550	600	650	700	750	800	850	900	950	1000	1050	1100	1150	1200	1250	1300
400	11	11	11	11	11	11	11	11	11	11	11	11	11	11	11	11	11	11
500	11	11	11	11	10	10	10	10	10	9	11	11	11	11	11	11	10	10
600	11	10	10	9	9	9	9	9	8	8	10	10	10	10	9	9	9	9
700	11	9	9	8	8	8	8	7	7	7	9	9	9	9	8	8	8	8
800	11	8	8	7	7	7	7	6	6	6	8	8	8	8	7	7	7	7
900	11	7	7	6	6	6	6	6	5	5	7	7	7	7	6	6	6	6
1000	11	6	6	6	5	5	5	5	5	5	6	6	6	6	6	6	5	5

All sides open

WIDTH (cm)

PROJECTION (cm)	450	500	550	600	650	700	750	800	850	900	950	1000	1050	1100	1150	1200	1250	1300
400	11	11	11	11	10	10	9	9	9	8	11	11	11	11	11	11	10	10
500	11	11	11	10	9	9	9	9	9	8	11	11	11	11	10	10	9	9
600	11	11	10	10	9	8	8	8	8	8	11	11	10	10	10	10	9	9
700	11	10	9	9	8	8	8	7	7	7	11	10	9	9	9	9	8	8
800	10	9	8	8	8	7	7	7	7	7	10	9	8	8	8	8	8	8
900	9	8	7	7	7	7	7	6	6	6	9	8	7	7	7	7	7	7
1000	9	7	6	6	6	6	6	6	6	6	9	7	6	6	6	6	6	6

With side enclosure

*The values are given according to the Beaufort scale.

**Calculated for Products with a front height of 250 cm according to Eurocode EN 1991-1-4 Terrain Category 4.

*** You can ask for new calculations for special designs.

PLUS Twin Without Middle Pillar

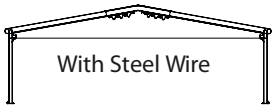

Vidth

	2 RAILS					3 RAILS									4 RAILS								FS4	FS9-S*
	250 cm	300 cm	350 cm	400 cm	450 cm	500 cm	550 cm	600 cm	650 cm	700 cm	750 cm	800 cm	850 cm	900 cm	950 cm	1000 cm	1050 cm	1100 cm	1150 cm	1200 cm	1250 cm	1300 cm		
400 cm	€ 8.636	€ 9.058	€ 9.650	€ 10.252	€ 10.674	€ 12.537	€ 12.948	€ 13.360	€ 14.140	€ 14.487	€ 14.773	€ 15.179	€ 15.589	€ 15.997	€ 18.053	€ 18.457	€ 18.864	€ 19.271	€ 19.679	€ 19.995	€ 20.539	€ 21.170	€ 1.040	€ 125
450 cm	€ 8.828	€ 9.362	€ 9.946	€ 10.465	€ 10.892	€ 12.845	€ 13.376	€ 13.793	€ 14.471	€ 14.822	€ 15.118	€ 15.643	€ 16.170	€ 16.474	€ 18.496	€ 18.907	€ 19.433	€ 19.846	€ 20.261	€ 20.582	€ 21.136	€ 21.772	€ 1.116	€ 144
500 cm	€ 9.017	€ 9.663	€ 10.241	€ 10.676	€ 11.108	€ 13.152	€ 13.803	€ 14.225	€ 14.799	€ 15.158	€ 15.461	€ 16.105	€ 16.752	€ 16.950	€ 18.937	€ 19.357	€ 20.001	€ 20.419	€ 20.843	€ 21.168	€ 21.732	€ 22.374	€ 1.192	€ 163
550 cm	€ 9.353	€ 10.037	€ 10.651	€ 11.124	€ 11.594	€ 13.771	€ 14.460	€ 14.921	€ 15.534	€ 15.928	€ 16.270	€ 16.951	€ 17.639	€ 17.876	€ 19.969	€ 20.428	€ 21.112	€ 21.568	€ 22.031	€ 22.390	€ 22.990	€ 23.670	€ 1.269	€ 181
600 cm	€ 9.688	€ 10.411	€ 11.060	€ 11.572	€ 12.081	€ 14.388	€ 15.115	€ 15.618	€ 16.269	€ 16.697	€ 17.079	€ 17.799	€ 18.525	€ 18.802	€ 21.001	€ 21.499	€ 22.224	€ 22.717	€ 23.219	€ 23.610	€ 24.248	€ 24.965	€ 1.345	€ 200
650 cm	€ 9.991	€ 10.614	€ 11.272	€ 11.895	€ 12.412	€ 14.816	€ 15.440	€ 16.061	€ 16.721	€ 17.153	€ 17.543	€ 18.272	€ 19.010	€ 19.289	€ 21.679	€ 22.183	€ 22.804	€ 23.306	€ 23.923	€ 24.322	€ 24.968	€ 25.581	€ 1.421	€ 219
700 cm	€ 10.296	€ 10.819	€ 11.483	€ 12.220	€ 12.743	€ 15.245	€ 15.767	€ 16.505	€ 17.174	€ 17.610	€ 18.008	€ 18.746	€ 19.496	€ 19.776	€ 22.357	€ 22.869	€ 23.386	€ 23.895	€ 24.631	€ 25.034	€ 25.687	€ 26.197	€ 1.497	€ 238
750 cm	€ 10.496	€ 11.026	€ 11.697	€ 12.441	€ 12.971	€ 15.563	€ 16.092	€ 16.838	€ 17.513	€ 17.957	€ 18.362	€ 19.106	€ 19.860	€ 20.154	€ 22.813	€ 23.333	€ 23.857	€ 24.374	€ 25.118	€ 25.527	€ 26.188	€ 26.705	€ 1.574	€ 257
800 cm	€ 10.694	€ 11.231	€ 11.910	€ 12.661	€ 13.551	€ 16.272	€ 16.815	€ 17.596	€ 18.304	€ 18.784	€ 19.223	€ 20.001	€ 20.786	€ 21.121	€ 23.887	€ 24.442	€ 25.001	€ 25.552	€ 26.329	€ 26.773	€ 27.468	€ 28.021	€ 1.650	€ 276
850 cm	€ 10.898	€ 11.443	€ 12.129	€ 12.888	€ 13.785	€ 16.599	€ 17.151	€ 17.940	€ 18.656	€ 19.141	€ 19.588	€ 20.373	€ 21.166	€ 21.506	€ 24.355	€ 24.918	€ 25.483	€ 26.044	€ 26.829	€ 27.274	€ 27.978	€ 28.538	€ 1.726	€ 295
900 cm	€ 11.103	€ 11.655	€ 12.348	€ 13.114	€ 14.019	€ 16.927	€ 17.487	€ 18.283	€ 19.006	€ 19.663	€ 20.148	€ 20.971	€ 21.546	€ 21.891	€ 24.823	€ 25.668	€ 26.242	€ 26.814	€ 27.608	€ 28.059	€ 28.487	€ 29.056	€ 1.803	€ 313
950 cm	€ 11.304	€ 11.863	€ 12.564	€ 13.338	€ 14.248	€ 17.249	€ 17.814	€ 18.617	€ 19.350	€ 20.012	€ 20.505	€ 21.335	€ 21.918	€ 22.271	€ 25.284	€ 26.137	€ 26.717	€ 27.295	€ 28.098	€ 28.555	€ 28.992	€ 29.566	€ 1.879	€ 332
1000 cm	€ 11.504	€ 12.071	€ 12.778	€ 13.559	€ 14.498	€ 17.603	€ 18.220	€ 19.060	€ 19.830	€ 20.360	€ 20.860	€ 22.919	€ 23.832	€ 24.261	€ 26.013	€ 26.603	€ 27.192	€ 27.776	€ 30.317	€ 30.847	€ 31.678	€ 32.333	€ 1.955	€ 351

FS3	€ 298	€ 312	€ 341	€ 374	€ 405	€ 436	€ 467	€ 498	€ 529	€ 560	€ 720	€ 751	€ 782	€ 813	€ 847	€ 878	€ 908	€ 939	€ 970	€ 1.001	€ 1.032	€ 1.063
FS5-A	€ 55	€ 69	€ 81	€ 93	€ 107	€ 119	€ 134	€ 145	€ 160	€ 172	€ 186	€ 198	€ 212	€ 224	€ 238	€ 250	€ 265	€ 277	€ 291	€ 303	€ 317	€ 329
FS5-E	€ 76	€ 95	€ 112	€ 128	€ 148	€ 164	€ 184	€ 200	€ 220	€ 236	€ 256	€ 273	€ 292	€ 309	€ 328	€ 345	€ 364	€ 381	€ 401	€ 417	€ 437	€ 453

Note: 50x150mm Al. Side beam is included in the price. For other option which is 100x150mm Al. Special side beam is extra cost.

FS3	Gutter System (for both direction)
FS5-A	Additional Fabric Support Profile (Standard) (for both direction)
FS5-E	Additional Fabric Support Profile (3 Axis) (for both direction)
FS4	Additional Rail for PLUS Series - Al. - 120x150mm
FS8	Lighting System
FS9-S*	Price difference for Side Beam for PLUS Series - Al. - 100x150mm (Special)

FS8	
FS8-S	SPOT
FS8-L	LINEAR
FS8-E	3 AXIS

LED TYPE & MODULE		
2 LED	3 LED	4 LED
€ 125	€ 152	€ 179
€ 179	€ 233	-
€ 206	€ 268	-

* FS9 Side Beam (Al. 50x150mm) is included in the price. For other option which is 100x150mm Al. Special side beam is extra cost.
* FS Flexy Plain/3D or Stam 6002 is included in the price
* Motor and Remote control is included in the price
* RAL Colours specified in Aluminium coating catalogue are included in price. Any other RAL colours which are existing in our Supplier's stock can be applied without extra cost.
* Standard colours are RAL9010, RAL7040, RAL1013, RAL7046, RAL9004, RAL3022, RAL120-2, RAL7036, RAL8019, RAL120-5, RAL8025, RAL4001, RAL620-3, RAL5008
* Painting cost has to be min. 125€
* Plastic parts coloured only specified colours

DEDUCTIONS

Price deduction can apply only front pillars, back pillars and side beam. The price of the front pillar, back pillar and side beam can be deducted from options price.

OPTIONS

FS10	Extra pillar (100x100mm Al.)	€ 335	pcs
FS10-ST3	Extra pillar (100x100x3mm St.)	€ 401	pcs
FS10-ST5	Extra pillar (100x100x5mm St.)	€ 623	pcs
FS11	Deco ceiling cover	€ 46	m^2
FS12	Izo-Pro ceiling cover (up to 800 cm width)	€ 39	m^2
FS15	Side beam pillar (50x100mm - Al)	€ 174	pcs
FS15-B	Side beam pillar (100x100mm - Al)	€ 335	pcs
FS16	Wood effect (*Price difference for standart patterns (up to 700cm projection) (*Can not be applied to steel construction or freestanding products with base plate.)	10% of product price	
FS19	Fix louver	€ 46	lm
FS23	External Square Downpipe	€ 205	pcs
FS24	W96 Ceiling Cover	€ 53	m^2
FS25	Fabric support profile special color	€ 11	m^2
FS26	Exclusive fabric difference	€ 31	m^2
FS27	3 Axis lighting fabric support profile difference	€ 9	m^2
FS29-1	Sun Sensor (SUNIS) (with Universal Receiver, it's included in the price)	€ 596	pcs
FS29-2	Wind Sensor (EOLIS RTS) (with Universal Receiver, it's included in the price)	€ 367	pcs
FS29-3	Sun and Wind Sensor (SOLIRIS) (with Universal Receiver, it's included in the price)	€ 459	pcs
FS30	CONNEXOON	€246	pcs
FS31-1	Remote Control - PURE - Telis 1	€55	pcs
FS31-4	Remote Control - PURE - Telis 4	€93	pcs
FS31-16	Remote Control - PURE - Telis 16	€264	pcs
FS32-1	Remote Control - PATIO - Telis 1	€76	pcs
FS32-4	Remote Control - PATIO - Telis 4	€123	pcs
FS33-1	Remote Control - LOUNGE - Telis 1	€93	pcs
FS33-4	Remote Control - LOUNGE - Telis 4	€133	pcs
FS34-1	Remote Control - MODULIS PURE - Telis 1	€125	pcs
FS34-4	Remote Control - MODULIS PURE - Telis 4	€192	pcs
FS35-1	Remote Control - MODULIS LOUNGE - Telis 1	€144	pcs
FS35-4	Remote Control - MODULIS LOUNGE - Telis 4	€220	pcs

*** Can't apply a sensor to the single motor product. For further information please contact with PALMIYE**

EXTENSIONS

Rail	PLUS - 120x150mm	€ 209	lm
Beam	Al. 100x150mm	€ 96	lm
Beam	St. 100x150x3mm	€ 190	lm
Beam	St. 100x150x5mm	€ 246	lm
Beam	St. 100x200x3mm	€ 193	lm
Beam	St. 100x200x5mm	€ 293	lm
Fabric protection cover	Al. - 63x___cm	€ 37	m^2
Gutter	Special Profile	€ 28	lm
Pillar	Al. 100x100mm	€ 107	lm
Pillar	St. 100x100x3mm	€ 129	lm
Pillar	St. 100x100x5mm	€ 246	lm
Pillar	St. 150x150x3mm	€ 261	lm
Pillar	St. 150x150x5mm	€ 390	lm

Max. Al. front pillar height is 280 cm
Max. St 3mm front pillar height is 380 cm
Max. St 5mm front pillar height is 480 cm

STANDARD CONSTRUCTION

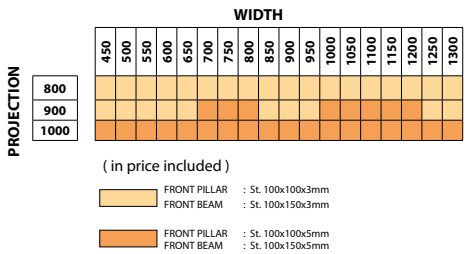

PRICE DIFFERENCE

BEAM GROUP

Front Beam	**Standard**	**St. 100x150x3mm**		
	to	St. 100x150x5mm	€ 56	lm
		St. 100x200x3mm	€ 3	lm
		St. 100x200x5mm	€ 103	lm

PILLAR GROUP

Front Pillar	**Standard**	**St. 100x100x3mm**		
	to	St. 100x100x5mm	€ 222	pcs
		St. 150x150x3mm	€ 347	pcs
		St. 150x150x5mm	€ 715	pcs

PLUS
Twin

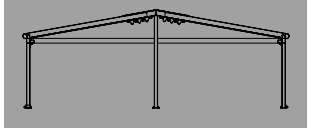

MAXIMUM DIMENSIONS

	WIDTH	PROJECTION
2 RAILS	450 cm	2000 cm
3 RAILS	900 cm	2000 cm
4 RAILS	1300 cm	1400 cm

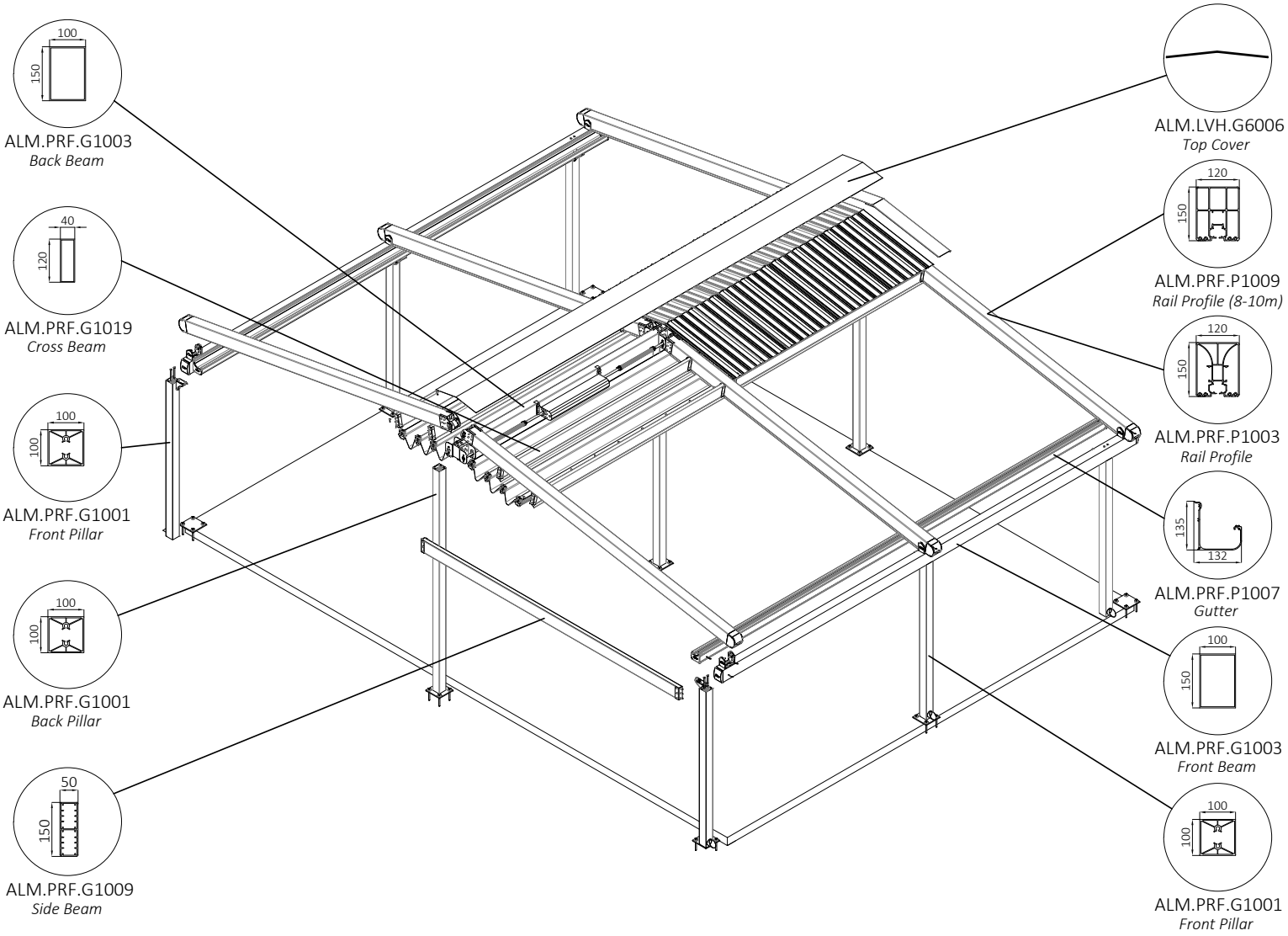

TECHNICAL FEATURES

COLLECTED FABRIC DIMENSIONS

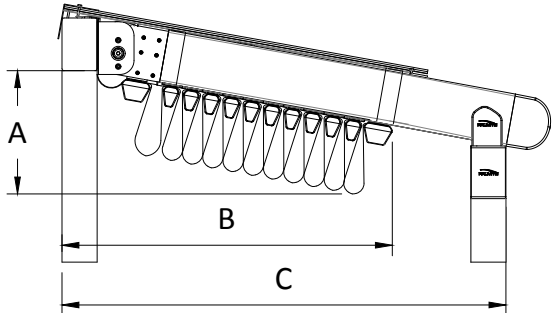

	185	235	284	334	383	433	482	532	581	631	680	729	779	828	878	927	977	C
4	34																	61
5		35																68
6			36															74
7				37														81
8					38													87
9						39												94
10							40											100
11								41										107
12									42									113
14										44								126
15											45							133
16												46						139
17													47					146
18														48				152
19															49			159
20																50		165
21																	51	172

DRAINAGE CALCULATION

Type	Max. m²
Full	39 m²/pc
Half	18 m²/pc

* per drainage

There should be at least one drainage, each 8 m length gutter.

MINIMUM SLOPE CHART

Slope	6,4-7,9%	7,4-8,8%	8,4-9,7%	9,4-10,8%	10,4-12%	11,2-12,7%	12-13,4%	13-14,5%	14-15,7%	15-16,6%	16-17,6%
Rail Center											
	200	**225**	**250**	**275**	**300**	**325**	**350**	**375**	**400**	**425**	**450**
250	16	19	21	24	26	28	30	33	35	38	40
300	20	23	26	29	31	34	37	40	42	45	48
350	23	27	30	34	37	40	43	46	49	53	56
400	27	31	35	39	42	46	49	53	57	61	64
450	32	36	40	44	48	52	56	60	64	69	73
500	36	41	45	50	54	59	63	68	72	77	81
550	40	45	50	55	60	65	70	75	80	85	90
600	44	50	55	61	66	72	77	83	88	94	99
650	49	55	61	67	72	78	84	90	96	102	108
700	54	60	66	73	79	85	91	98	104	111	117
750	59	66	72	79	85	92	99	106	112	119	126
800	63	70	77	85	92	99	106	114	121	129	136
850	67	75	82	91	99	106	113	122	130	138	146
900	71	79	87	97	106	113	120	130	139	148	156
950	75	84	92	103	113	120	127	138	148	157	166
1000	79	88	97	109	120	127	134	146	157	167	176

Projection

*Note: Max. slope can be up to 20%

For back height of system 30 cm should be added to slope value.

WIND RESISTANCE

WIDTH (cm)

	450	500	550	600	650	700	750	800	850	900	950	1000	1050	1100	1150	1200	1250	1300
800	11	11	11	11	11	10	10	10	10	9	11	11	11	11	11	11	11	11
900	11	11	11	11	10	10	10	9	9	9	11	11	11	11	11	11	10	10
1000	11	11	10	10	10	10	9	9	9	8	11	11	10	10	10	10	10	10
1100	11	11	10	10	10	9	9	9	8	8	11	11	10	10	10	10	10	10
1200	10	10	10	10	9	9	8	8	8	8	10	10	10	10	10	10	9	9
1300	10	10	9	9	9	8	8	8	8	8	10	10	9	9	9	9	9	9
1400	9	9	9	9	8	8	8	8	8	7	9	9	9	9	9	9	8	8
1500	9	9	8	8	8	8	8	7	7	7	9	9	8	8	8	8	8	
1600	8	8	8	8	8	7	7	7	7	7	8	8	8	8	8	8		
1700	8	8	8	7	7	7	7	7	7	7	8	8	8	8	7			
1800	8	8	7	7	7	7	7	7	7	7	8	8	7	7				
1900	7	7	7	7	7	7	7	7	7	7	7	7	7					
2000	7	7	7	7	7	7	7	7	7	7	7	7						

All sides open

WIDTH (cm)

	450	500	550	600	650	700	750	800	850	900	950	1000	1050	1100	1150	1200	1250	1300
800	9	9	9	8	8	8	7	7	7	7	9	9	9	9	8	8	8	8
900	9	9	8	8	8	7	7	7	7	7	9	9	8	8	8	8	8	8
1000	9	8	8	8	7	7	7	7	7	7	9	8	8	8	8	8	7	7
1100	9	8	8	7	7	7	7	7	7	7	9	8	8	8	7	7	7	7
1200	8	8	8	7	7	7	7	7	7	7	8	8	8	8	7	7	7	7
1300	8	8	7	7	7	7	7	7	7	7	8	8	7	7	7	7	7	7
1400	8	8	7	7	7	7	7	7	7	7	8	8	7	7	7	7	7	7
1500	8	7	7	7	7	7	7	7	7	7	8	7	7	7	7	7	7	
1600	8	7	7	7	7	7	7	7	7	7	8	7	7	7	7	7		
1700	8	7	7	7	7	7	7	7	7	6	8	7	7	7	7			
1800	7	7	7	7	7	7	7	6	6	6	7	7	7	7				
1900	7	7	7	7	7	7	6	6	6	6	7	7	7					
2000	7	7	7	7	7	6	6	6	6	6	7	7						

With side enclosure

*The values are given according to the Beaufort scale.

**Calculated for Products with a front height of 250 cm according to Eurocode EN 1991-1-4 Terrain Category 4.

*** You can ask for new calculations for special designs.

GALA PLUS Twin

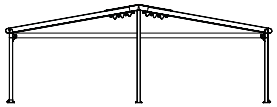

Vidth

	2 RAILS					3 RAILS									4 RAILS								FS4	FS9-S
	250 cm	300 cm	350 cm	400 cm	450 cm	500 cm	550 cm	600 cm	650 cm	700 cm	750 cm	800 cm	850 cm	900 cm	950 cm	1000 cm	1050 cm	1100 cm	1150 cm	1200 cm	1250 cm	1300 cm		
400 cm	€ 8.372	€ 8.781	€ 9.354	€ 9.939	€ 10.348	€ 12.154	€ 12.552	€ 12.951	€ 13.707	€ 14.044	€ 14.321	€ 14.715	€ 15.112	€ 15.508	€ 17.501	€ 17.892	€ 18.287	€ 18.681	€ 19.077	€ 19.384	€ 19.911	€ 20.522	€ 1.040	€ 125
450 cm	€ 8.558	€ 9.075	€ 9.642	€ 10.145	€ 10.559	€ 12.452	€ 12.967	€ 13.371	€ 14.028	€ 14.369	€ 14.655	€ 15.164	€ 15.676	€ 15.970	€ 17.930	€ 18.329	€ 18.839	€ 19.239	€ 19.641	€ 19.952	€ 20.490	€ 21.107	€ 1.116	€ 144
500 cm	€ 8.742	€ 9.368	€ 9.928	€ 10.350	€ 10.768	€ 12.750	€ 13.381	€ 13.790	€ 14.346	€ 14.695	€ 14.988	€ 15.613	€ 16.240	€ 16.432	€ 18.358	€ 18.765	€ 19.390	€ 19.795	€ 20.205	€ 20.521	€ 21.067	€ 21.690	€ 1.192	€ 163
550 cm	€ 9.067	€ 9.730	€ 10.325	€ 10.784	€ 11.239	€ 13.350	€ 14.017	€ 14.464	€ 15.059	€ 15.441	€ 15.772	€ 16.433	€ 17.099	€ 17.329	€ 19.359	€ 19.803	€ 20.466	€ 20.909	€ 21.357	€ 21.705	€ 22.287	€ 22.946	€ 1.269	€ 181
600 cm	€ 9.391	€ 10.092	€ 10.722	€ 11.218	€ 11.712	€ 13.948	€ 14.653	€ 15.140	€ 15.771	€ 16.186	€ 16.557	€ 17.254	€ 17.959	€ 18.227	€ 20.359	€ 20.842	€ 21.544	€ 22.022	€ 22.509	€ 22.888	€ 23.507	€ 24.202	€ 1.345	€ 200
650 cm	€ 9.686	€ 10.289	€ 10.927	€ 11.532	€ 12.032	€ 14.363	€ 14.968	€ 15.570	€ 16.210	€ 16.628	€ 17.006	€ 17.713	€ 18.429	€ 18.699	€ 21.016	€ 21.505	€ 22.107	€ 22.593	€ 23.192	€ 23.578	€ 24.204	€ 24.799	€ 1.421	€ 219
700 cm	€ 9.982	€ 10.488	€ 11.132	€ 11.846	€ 12.353	€ 14.779	€ 15.285	€ 16.000	€ 16.649	€ 17.072	€ 17.457	€ 18.172	€ 18.900	€ 19.171	€ 21.673	€ 22.170	€ 22.671	€ 23.164	€ 23.877	€ 24.268	€ 24.901	€ 25.396	€ 1.497	€ 238
750 cm	€ 10.175	€ 10.689	€ 11.340	€ 12.061	€ 12.575	€ 15.087	€ 15.599	€ 16.323	€ 16.978	€ 17.408	€ 17.800	€ 18.522	€ 19.253	€ 19.538	€ 22.115	€ 22.619	€ 23.127	€ 23.628	€ 24.349	€ 24.746	€ 25.387	€ 25.889	€ 1.574	€ 257
800 cm	€ 10.367	€ 10.888	€ 11.546	€ 12.274	€ 12.795	€ 15.394	€ 15.914	€ 16.645	€ 17.304	€ 17.743	€ 18.143	€ 18.870	€ 19.604	€ 19.902	€ 22.557	€ 23.069	€ 23.584	€ 24.092	€ 24.819	€ 25.222	€ 25.870	€ 26.380	€ 1.650	€ 276
850 cm	€ 10.565	€ 11.093	€ 11.758	€ 12.494	€ 13.022	€ 15.712	€ 16.240	€ 16.978	€ 17.645	€ 18.089	€ 18.497	€ 19.231	€ 19.973	€ 20.276	€ 23.012	€ 23.530	€ 24.051	€ 24.569	€ 25.303	€ 25.709	€ 26.364	€ 26.881	€ 1.726	€ 295
900 cm	€ 10.764	€ 11.299	€ 11.970	€ 12.713	€ 13.248	€ 16.030	€ 16.565	€ 17.310	€ 17.985	€ 18.435	€ 18.850	€ 19.591	€ 20.341	€ 20.649	€ 23.465	€ 23.992	€ 24.519	€ 25.045	€ 25.786	€ 26.196	€ 26.858	€ 27.383	€ 1.803	€ 313
950 cm	€ 10.958	€ 11.501	€ 12.180	€ 12.930	€ 13.471	€ 16.342	€ 16.882	€ 17.635	€ 18.319	€ 18.773	€ 19.195	€ 19.944	€ 20.702	€ 21.017	€ 23.912	€ 24.446	€ 24.979	€ 25.511	€ 26.261	€ 26.677	€ 27.347	€ 27.877	€ 1.879	€ 332
1000 cm	€ 11.152	€ 11.702	€ 12.388	€ 13.145	€ 13.693	€ 16.652	€ 17.198	€ 17.959	€ 18.652	€ 19.111	€ 19.540	€ 21.479	€ 22.308	€ 23.575	€ 24.357	€ 24.898	€ 25.439	€ 25.977	€ 28.413	€ 28.899	€ 29.636	€ 31.450	€ 1.955	€ 351
1050 cm	€ 11.493	€ 12.181	€ 12.903	€ 13.697	€ 14.281	€ 17.378	€ 18.071	€ 18.760	€ 19.600	€ 20.093	€ 20.558	€ 22.536	€ 23.403	€ 24.816	€ 25.579	€ 26.172	€ 26.859	€ 27.435	€ 29.909	€ 30.423	€ 31.198	€ 33.158	€ 2.040	€ 369
1100 cm	€ 11.833	€ 12.661	€ 13.418	€ 14.247	€ 14.867	€ 18.106	€ 18.943	€ 19.563	€ 20.547	€ 21.074	€ 21.577	€ 23.594	€ 25.341	€ 26.057	€ 26.800	€ 27.447	€ 28.280	€ 28.894	€ 31.404	€ 31.949	€ 33.933	€ 34.865	€ 2.126	€ 388
1150 cm	€ 12.041	€ 12.875	€ 13.641	€ 14.476	€ 15.104	€ 18.430	€ 19.276	€ 19.904	€ 20.894	€ 21.427	€ 21.938	€ 23.961	€ 25.716	€ 26.439	€ 27.276	€ 27.914	€ 28.756	€ 29.377	€ 31.894	€ 32.444	€ 34.436	€ 35.375	€ 2.210	€ 405
1200 cm	€ 12.249	€ 13.091	€ 13.865	€ 14.706	€ 15.340	€ 18.755	€ 19.611	€ 20.246	€ 21.241	€ 22.841	€ 23.420	€ 24.330	€ 26.092	€ 26.822	€ 29.190	€ 29.880	€ 30.790	€ 31.480	€ 33.476	€ 34.073	€ 34.940	€ 35.887	€ 2.295	€ 424
1250 cm	€ 12.453	€ 13.303	€ 14.083	€ 14.931	€ 15.573	€ 19.078	€ 19.942	€ 20.583	€ 21.587	€ 23.146	€ 23.728	€ 24.643	€ 26.406	€ 27.147	€ 29.649	€ 30.348	€ 31.208	€ 31.960	€ 33.965	€ 34.566	€ 35.441	€ 36.395	€ 2.381	€ 443
1300 cm	€ 12.655	€ 13.514	€ 14.299	€ 15.154	€ 15.806	€ 19.399	€ 20.270	€ 20.919	€ 21.930	€ 23.447	€ 24.034	€ 25.759	€ 26.720	€ 27.470	€ 30.107	€ 30.814	€ 31.626	€ 32.441	€ 34.451	€ 35.058	€ 35.941	€ 36.901	€ 2.466	€ 462
1350 cm	€ 12.861	€ 13.724	€ 14.516	€ 15.380	€ 16.037	€ 19.722	€ 20.597	€ 21.257	€ 22.274	€ 23.794	€ 24.391	€ 26.121	€ 27.094	€ 27.845	€ 30.564	€ 31.279	€ 32.151	€ 32.919	€ 34.939	€ 35.549	€ 36.440	€ 37.407	€ 2.550	€ 481
1400 cm	€ 13.066	€ 13.935	€ 14.734	€ 15.607	€ 16.268	€ 20.859	€ 21.801	€ 22.530	€ 23.617	€ 24.141	€ 24.746	€ 26.485	€ 27.469	€ 28.222	€ 31.023	€ 31.743	€ 32.678	€ 34.447	€ 35.427	€ 36.041	€ 36.941	€ 37.912	€ 2.635	€ 500
1450 cm	€ 13.271	€ 14.147	€ 14.953	€ 15.831	€ 16.500	€ 21.180	€ 22.130	€ 22.865	€ 23.962	€ 24.490	€ 25.101	€ 26.846	€ 27.836	€ 28.599	€ 31.481	€ 32.208	€ 33.151	€ 34.927	€ 35.913	€ 36.534	€ 37.439		€ 2.721	€ 519
1500 cm	€ 13.475	€ 14.358	€ 15.170	€ 16.054	€ 16.730	€ 21.501	€ 22.459	€ 23.199	€ 24.305	€ 24.839	€ 26.217	€ 27.208	€ 28.202	€ 29.372	€ 31.939	€ 33.641	€ 34.632	€ 35.406	€ 36.397	€ 37.025	€ 37.936		€ 2.805	€ 538
1550 cm	€ 13.815	€ 14.735	€ 15.584	€ 16.504	€ 17.216	€ 22.120	€ 23.116	€ 23.893	€ 25.036	€ 25.602	€ 27.018	€ 28.046	€ 29.077	€ 30.287	€ 32.963	€ 34.702	€ 35.731	€ 36.543	€ 37.572	€ 38.232			€ 2.890	€ 556
1600 cm	€ 14.156	€ 15.113	€ 15.997	€ 16.954	€ 17.704	€ 22.738	€ 23.773	€ 24.587	€ 25.765	€ 27.086	€ 27.819	€ 28.884	€ 29.951	€ 31.202	€ 34.914	€ 35.763	€ 36.830	€ 37.679	€ 38.746	€ 39.437			€ 2.976	€ 575
1650 cm	€ 14.497	€ 15.491	€ 16.409	€ 17.403	€ 18.191	€ 23.355	€ 24.430	€ 25.281	€ 26.495	€ 27.849	€ 28.620	€ 29.722	€ 30.825	€ 32.118	€ 35.938	€ 36.824	€ 37.929	€ 38.815	€ 39.920				€ 3.061	€ 594
1700 cm	€ 14.838	€ 15.869	€ 16.822	€ 17.853	€ 18.679	€ 23.973	€ 25.087	€ 25.975	€ 27.905	€ 28.612	€ 29.422	€ 30.560	€ 32.085	€ 33.034	€ 36.962	€ 37.885	€ 39.029	€ 39.951	€ 41.095				€ 3.145	€ 613
1750 cm	€ 15.179	€ 16.247	€ 17.234	€ 18.302	€ 19.167	€ 24.590	€ 25.744	€ 26.669	€ 28.635	€ 29.375	€ 30.223	€ 31.398	€ 32.959	€ 33.949	€ 37.987	€ 38.946	€ 40.128	€ 41.088					€ 3.231	€ 632
1800 cm	€ 15.960	€ 16.625	€ 17.647	€ 18.752	€ 19.654	€ 25.208	€ 27.388	€ 29.018	€ 30.410	€ 31.213	€ 32.128	€ 33.370	€ 34.996	€ 36.057	€ 40.454	€ 41.480	€ 42.729	€ 43.755					€ 3.316	€ 651
1850 cm	€ 16.301	€ 17.003	€ 18.059	€ 19.201	€ 20.142	€ 25.826	€ 28.045	€ 29.712	€ 31.140	€ 31.976	€ 32.930	€ 34.208	€ 35.870	€ 36.973	€ 41.478	€ 42.541	€ 43.828						€ 3.400	€ 670
1900 cm	€ 16.642	€ 17.381	€ 18.472	€ 19.651	€ 20.630	€ 26.443	€ 28.702	€ 30.406	€ 31.870	€ 32.739	€ 33.731	€ 35.047	€ 36.744	€ 37.888	€ 42.502	€ 43.602	€ 44.927						€ 3.485	€ 689
1950 cm	€ 16.983	€ 17.759	€ 18.884	€ 20.100	€ 21.117	€ 27.061	€ 29.359	€ 31.100	€ 32.599	€ 33.502	€ 34.532	€ 35.885	€ 37.618	€ 38.804	€ 43.526	€ 44.663							€ 3.571	€ 707
2000 cm	€ 17.324	€ 18.137	€ 19.297	€ 20.550	€ 21.605	€ 28.636	€ 30.614	€ 31.794	€ 33.329	€ 34.266	€ 35.333	€ 36.723	€ 38.491	€ 39.720	€ 44.551	€ 45.724							€ 3.655	€ 726

FS3	€ 298	€ 312	€ 341	€ 374	€ 405	€ 436	€ 467	€ 498	€ 529	€ 560	€ 720	€ 751	€ 782	€ 813	€ 847	€ 878	€ 908	€ 939	€ 970	€ 1.001	€ 1.032	€ 1.063
FS5-A	€ 55	€ 69	€ 81	€ 93	€ 107	€ 119	€ 134	€ 145	€ 160	€ 172	€ 186	€ 198	€ 212	€ 224	€ 238	€ 250	€ 265	€ 277	€ 291	€ 303	€ 317	€ 329
FS5-E	€ 76	€ 95	€ 112	€ 128	€ 148	€ 164	€ 184	€ 200	€ 220	€ 236	€ 256	€ 273	€ 292	€ 309	€ 328	€ 345	€ 364	€ 381	€ 401	€ 417	€ 437	€ 453

FS3	Gutter System (for both direction)
FS5-A	Additional Fabric Support Profile (Standard) (for both direction)
FS5-E	Additional Fabric Support Profile (3 Axis) (for both direction)
FS4	Additional Rail for PLUS Series - Al. - 120x150mm
FS8	Lighting System
FS9-S*	Price difference for Side Beam for PLUS Series - Al. - 100x150mm (Special)

FS8	
FS8-S	SPOT
FS8-L	LINEAR
FS8-E	3 AXIS

LED TYPE & MODULE		
2 LED	3 LED	4 LED
€ 125	€ 152	€ 179
€ 179	€ 233	-
€ 206	€ 268	-

Note: 50x150mm Al. Side beam is included in the price. For other option which is 100x150mm Al. Special side beam is extra cost.

* FS9 Side Beam (Al. 50x150mm) is included in the price. For other option which is 100x150mm Al. Special side beam is extra cost.
* FS Flexy Plain/3D or Stam 6002 is included in the price
* Motor and Remote control is included in the price
* RAL Colours specified in Aluminium coating catalogue are included in price. Any other RAL colours which are existing in our Supplier's stock can be applied without extra cost.
* Standard colours are RAL9010, RAL7040, RAL1013, RAL7046, RAL9004, RAL3022, RAL120-2, RAL7036, RAL8019, RAL120-5, RAL8025, RAL4001, RAL620-3, RAL5008
* Painting cost has to be min. 125€
* Plastic parts coloured only specified colours

DEDUCTIONS

Price deduction can apply only front pillars, back pillars and side beam. The price of the front pillar,

OPTIONS

FS10	Extra pillar (100x100mm Al.)	€ 335	pcs
FS10-ST3	Extra pillar (100x100x3mm St.)	€ 401	pcs
FS10-ST5	Extra pillar (100x100x5mm St.)	€ 623	pcs
FS11	Deco ceiling cover	€ 46	m^2
FS12	Izo-Pro ceiling cover (up to 800 cm width)	€ 39	m^2
FS15	Side beam pillar (50x100mm - Al)	€ 174	pcs
FS15-B	Side beam pillar (100x100mm - Al)	€ 335	pcs
FS16	Wood effect (*Price difference for standart patterns (up to 700cm projection) (*Can not be applied to steel construction or freestanding products with base plate.)	10% of product price	
FS19	Fix louver	€ 46	lm
FS23	External Square Downpipe	€ 205	pcs
FS24	W96 Ceiling Cover	€ 53	m^2
FS25	Fabric support profile special color	€ 11	m^2
FS26	Exclusive fabric difference	€ 31	m^2
FS27	3 Axis lighting fabric support profile difference	€ 9	m^2
FS29-1	Sun Sensor (SUNIS) (with Universal Receiver, it's included in the price)	€ 596	pcs
FS29-2	Wind Sensor (EOLIS RTS) (with Universal Receiver, it's included in the price)	€ 367	pcs
FS29-3	Sun and Wind Sensor (SOLIRIS) (with Universal Receiver, it's included in the price)	€ 459	pcs
FS30	CONNEXOON	€246	pcs
FS31-1	Remote Control - PURE - Telis 1	€55	pcs
FS31-4	Remote Control - PURE - Telis 4	€93	pcs
FS31-16	Remote Control - PURE - Telis 16	€264	pcs
FS32-1	Remote Control - PATIO - Telis 1	€76	pcs
FS32-4	Remote Control - PATIO - Telis 4	€123	pcs
FS33-1	Remote Control - LOUNGE - Telis 1	€93	pcs
FS33-4	Remote Control - LOUNGE - Telis 4	€133	pcs
FS34-1	Remote Control - MODULIS PURE - Telis 1	€125	pcs
FS34-4	Remote Control - MODULIS PURE - Telis 4	€192	pcs
FS35-1	Remote Control - MODULIS LOUNGE - Telis 1	€144	pcs
FS35-4	Remote Control - MODULIS LOUNGE - Telis 4	€220	pcs

*** Can't apply a sensor to the single motor product. For further information please contact with PALMIYE**

BACK PILLAR POSITION CHANGE

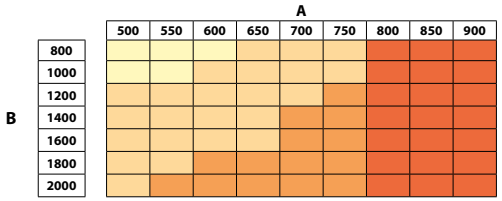

BACK PILLAR : Al. 100x100x3mm
BACK BEAM : Al. 100x150x3mm

BACK PILLAR : St. 100x100x3mm
BACK BEAM : St. 100x150x3mm

BACK PILLAR : St. 100x100x5mm
BACK BEAM : St. 100x150x5mm

BACK PILLAR : St. 100x100x5mm
BACK BEAM : Al. 100x200x5mm

(construction price difference needs to be added)

FRONT PILLAR POSITION CHANGE

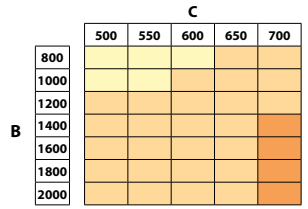

FRONT PILLAR : Al. 100x100x3mm
FRONT BEAM : Al. 100x150x3mm

FRONT PILLAR : St. 100x100x3mm
FRONT BEAM : St. 100x150x3mm

FRONT PILLAR : St. 100x100x5mm
FRONT BEAM : St. 100x150x5mm

(construction price difference needs to be added)

STANDARD CONSTRUCTION

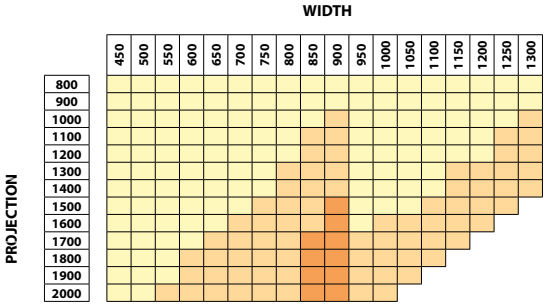

FRONT & BACK PILLAR : Al. 100x100x3mm
FRONT & BACK BEAM : Al. 100X150X3mm

FRONT & BACK PILLAR : St. 100x100x3mm
FRONT & BACK BEAM : St. 100x150x3mm

FRONT & BACK PILLAR : St. 100x100x5mm
FRONT & BACK BEAM : St. 100x150x5mm

(in price included)

PRICE DIFFERENCE

BEAM GROUP

	Standard	**Al. 100x150mm**		
Beam	to	St. 100x150x3mm	€ 95	lm
		St. 100x150x5mm	€ 151	lm
		St. 100x200x3mm	€ 98	lm
		St. 100x200x5mm	€ 197	lm

PILLAR GROUP

	Standard	**Al. 100x100mm**		
Pillar	to	St. 100x100x3mm	€ 66	pcs
		St. 100x100x5mm	€ 289	pcs
		St. 150x150x3mm	€ 414	pcs
		St. 150x150x5mm	€ 781	pcs

EXTENSIONS

Extensions of Standard Profiles

Rail	120x150mm	€ 209	lm
Beam	Al. 100x150mm	€ 96	lm
Beam	St. 100x150x3mm	€ 91	lm
Beam	St. 100x150x5mm	€ 146	lm
Beam	St. 100x200x3mm	€ 114	lm
Beam	St. 100x200x5mm	€ 174	lm
Beam	Al. 42x150mm	€ 65	lm
Beam	Al. 50x150mm	€ 115	lm
Fabric protection cover	Al. - 63x___cm	€ 37	m^2
Gutter	Special Profile	€ 28	lm

Max. Al. front pillar height is 280 cm
Max. St 3mm front pillar height is 380 cm
Max. St 5mm front pillar height is 480 cm

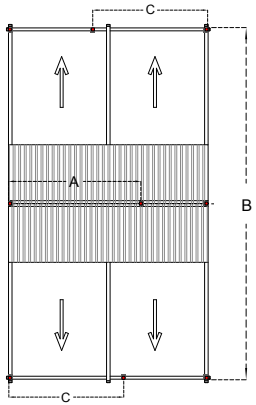

COMPACT
Twin

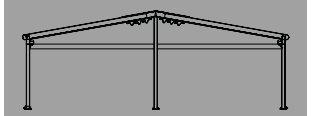

MAXIMUM DIMENSIONS

	WIDTH	PROJECTION
2 RAILS	450 cm	1200 cm
3 RAILS	900 cm	1200 cm
4 RAILS	1300 cm	1200 cm

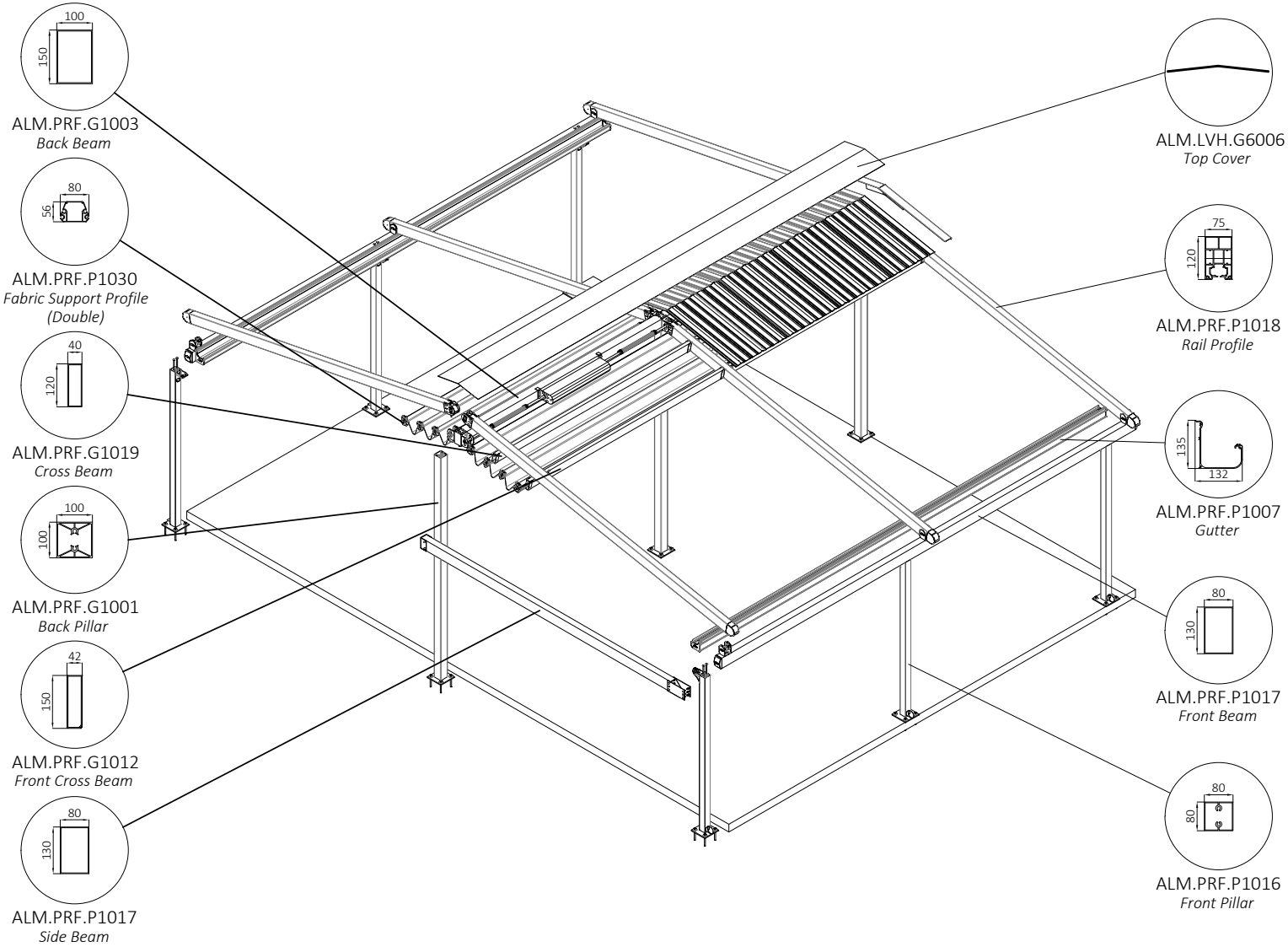

TECHNICAL FEATURES

COLLECTED FABRIC DIMENSIONS

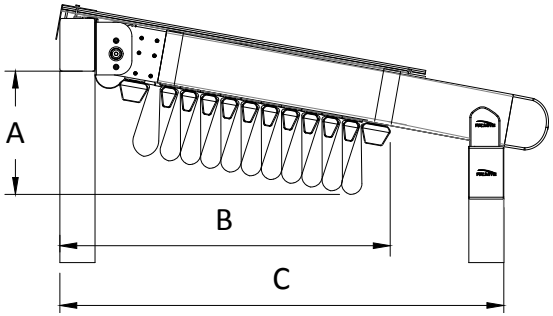

No of Fabric Support Profiles	Projection cm									C
	185	235	284	334	383	433	482	532	581	
4	34									61
5		35								68
6			36							74
7				37						81
8					38					87
9						39				94
10							40			100
11								41		107
13									43	120
	A									B

*Calculated according to a slope of 15%

DRAINAGE CALCULATION

Type	Max. m²
COMPACT	30 m²/pc

* per drainage

There should be at least one drainage, each 8 m length gutter.

MINIMUM SLOPE CHART

Slope	6,4-7,9%	7,4-8,8%	8,4-9,7%	9,4-10,8%	10,4-12%	11,2-12,7%	12-13,4%	13-14,5%	14-15,7%	15-16,6%	16-17,6%
Rail Center											
	200	**225**	**250**	**275**	**300**	**325**	**350**	**375**	**400**	**425**	**450**
250	11	14	16	19	21	23	25	28	30	33	35
300	15	18	21	24	26	29	32	35	37	40	43
350	18	22	25	29	32	35	38	41	44	48	51
400	22	26	30	34	37	41	44	48	52	56	59
450	27	31	35	39	43	47	51	55	59	64	68
500	31	36	40	45	49	54	58	63	67	72	76
550	35	40	45	50	55	60	65	70	75	80	85
600	39	45	50	56	61	67	72	78	83	89	94

Projection

*Note: Max. slope can be up to 20%

For back height of system 25 cm should be added to slope value.

WIND RESISTANCE

WIDTH (cm)

PROJECTION (cm)	450	500	550	600	650	700	750	800	850	900	950	1000	1050	1100	1150	1200	1250	1300
800	11	10	10	10	10	10	9	9	9	9	10	10	10	10	10	10	10	10
900	10	9	9	9	9	9	9	9	8	8	9	9	9	9	9	9	9	9
1000	10	9	9	9	9	8	8	8	8	8	9	9	9	9	9	9	9	9
1100	9	8	8	8	8	8	8	7	7	7	8	8	8	8	8	8	8	8
1200	8	8	8	7	7	7	7	7	7	6	8	8	8	8	7	7	7	7

WIDTH (cm)

PROJECTION (cm)	450	500	550	600	650	700	750	800	850	900	950	1000	1050	1100	1150	1200	1250	1300
800	8	8	8	7	7	7	6	6	6	6	8	8	8	8	7	7	7	7
900	8	7	7	7	7	7	6	6	6	6	8	7	7	7	7	7	7	7
1000	7	7	7	7	7	7	6	6	6	6	7	7	7	7	7	7	7	7
1100	7	7	6	6	6	6	6	6	6	6	7	7	6	6	6	6	6	6
1200	6	6	6	6	6	6	6	6	5	5	6	6	6	6	6	6	6	6

*The values are given according to the Beaufort scale.

**Calculated for Products with a front height of 250 cm according to Eurocode EN 1991-1-4 Terrain Category 4.

*** You can ask for new calculations for special designs.

GALA COMPACT Twin

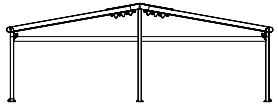

Width

	2 RAILS					3 RAILS									4 RAILS								FS4 FS10-C
	250 cm	300 cm	350 cm	400 cm	450 cm	500 cm	550 cm	600 cm	650 cm	700 cm	750 cm	800 cm	850 cm	900 cm	950 cm	1000 cm	1050 cm	1100 cm	1150 cm	1200 cm	1250 cm	1300 cm	
400 cm	€ 6.784	€ 7.113	€ 7.574	€ 8.045	€ 8.373	€ 9.833	€ 10.152	€ 10.472	€ 11.078	€ 11.347	€ 11.568	€ 11.882	€ 12.199	€ 12.515	€ 14.119	€ 14.430	€ 14.743	€ 15.057	€ 15.372	€ 15.614	€ 16.033	€ 16.520	€ 1.103
450 cm	€ 6.927	€ 7.344	€ 7.800	€ 8.204	€ 8.537	€ 10.064	€ 10.476	€ 10.799	€ 11.326	€ 11.598	€ 11.826	€ 12.233	€ 12.641	€ 12.875	€ 14.451	€ 14.767	€ 15.174	€ 15.492	€ 15.811	€ 16.056	€ 16.483	€ 16.974	€ 1.167
500 cm	€ 7.069	€ 7.573	€ 8.023	€ 8.361	€ 8.698	€ 10.294	€ 10.801	€ 11.127	€ 11.572	€ 11.850	€ 12.082	€ 12.582	€ 13.084	€ 13.234	€ 14.782	€ 15.104	€ 15.602	€ 15.923	€ 16.248	€ 16.497	€ 16.930	€ 17.425	€ 1.230
550 cm	€ 7.325	€ 7.858	€ 8.336	€ 8.703	€ 9.068	€ 10.768	€ 11.303	€ 11.660	€ 12.136	€ 12.439	€ 12.702	€ 13.230	€ 13.762	€ 13.943	€ 15.571	€ 15.924	€ 16.452	€ 16.802	€ 17.157	€ 17.431	€ 17.893	€ 18.417	€ 1.293
600 cm	€ 7.579	€ 8.143	€ 8.647	€ 9.044	€ 9.440	€ 11.239	€ 11.803	€ 12.193	€ 12.696	€ 13.027	€ 13.321	€ 13.878	€ 14.439	€ 14.650	€ 16.359	€ 16.742	€ 17.301	€ 17.680	€ 18.064	€ 18.363	€ 18.853	€ 19.405	€ 1.356
650 cm	€ 7.809	€ 8.293	€ 8.805	€ 9.289	€ 9.689	€ 11.563	€ 12.045	€ 12.526	€ 13.037	€ 13.369	€ 13.669	€ 14.233	€ 14.803	€ 15.015	€ 16.870	€ 17.258	€ 17.735	€ 18.120	€ 18.594	€ 18.897	€ 19.393	€ 19.864	€ 1.418
700 cm	€ 8.039	€ 8.445	€ 8.961	€ 9.532	€ 9.937	€ 11.886	€ 12.289	€ 12.860	€ 13.376	€ 13.712	€ 14.017	€ 14.587	€ 15.166	€ 15.379	€ 17.381	€ 17.774	€ 18.170	€ 18.560	€ 19.125	€ 19.431	€ 19.932	€ 20.322	€ 1.481
750 cm	€ 8.187	€ 8.597	€ 9.118	€ 9.695	€ 10.106	€ 12.120	€ 12.528	€ 13.106	€ 13.627	€ 13.968	€ 14.278	€ 14.853	€ 15.434	€ 15.658	€ 17.718	€ 18.116	€ 18.517	€ 18.912	€ 19.483	€ 19.795	€ 20.301	€ 20.695	€ 1.545
800 cm	€ 8.333	€ 8.749	€ 9.276	€ 9.858	€ 10.272	€ 12.355	€ 12.769	€ 13.351	€ 13.875	€ 14.222	€ 14.538	€ 15.117	€ 15.700	€ 15.933	€ 18.054	€ 18.457	€ 18.864	€ 19.264	€ 19.839	€ 20.155	€ 20.665	€ 21.067	€ 1.608
850 cm	€ 8.484	€ 8.905	€ 9.437	€ 10.023	€ 10.444	€ 12.597	€ 13.017	€ 13.605	€ 14.135	€ 14.486	€ 14.808	€ 15.391	€ 15.979	€ 16.216	€ 18.399	€ 18.808	€ 19.218	€ 19.626	€ 20.206	€ 20.524	€ 21.040	€ 21.445	€ 1.671
900 cm	€ 8.636	€ 9.062	€ 9.598	€ 10.189	€ 10.615	€ 12.839	€ 13.265	€ 13.856	€ 14.393	€ 14.748	€ 15.075	€ 15.663	€ 16.258	€ 16.498	€ 18.742	€ 19.157	€ 19.572	€ 19.986	€ 20.571	€ 20.892	€ 21.413	€ 21.824	€ 1.733
950 cm	€ 8.782	€ 9.214	€ 9.756	€ 10.354	€ 10.783	€ 13.077	€ 13.505	€ 14.102	€ 14.646	€ 15.003	€ 15.336	€ 15.930	€ 16.529	€ 16.776	€ 19.081	€ 19.501	€ 19.919	€ 20.338	€ 20.929	€ 21.253	€ 21.780	€ 22.196	€ 1.796
1000 cm	€ 8.929	€ 9.366	€ 9.912	€ 10.515	€ 10.950	€ 13.312	€ 13.744	€ 14.348	€ 14.896	€ 15.258	€ 15.596	€ 16.194	€ 16.801	€ 17.050	€ 19.416	€ 19.842	€ 20.266	€ 20.688	€ 21.283	€ 21.614	€ 22.145	€ 22.567	€ 1.859
1050 cm	€ 9.193	€ 9.741	€ 10.314	€ 10.945	€ 11.409	€ 13.878	€ 14.427	€ 14.972	€ 15.638	€ 16.026	€ 16.392	€ 17.021	€ 17.656	€ 18.022	€ 20.370	€ 20.836	€ 21.376	€ 21.828	€ 22.453	€ 22.805	€ 23.365	€ 23.901	€ 1.923
1100 cm	€ 9.456	€ 10.113	€ 10.715	€ 11.374	€ 11.865	€ 14.444	€ 15.107	€ 15.597	€ 16.377	€ 16.792	€ 17.188	€ 17.846	€ 18.510	€ 18.993	€ 21.320	€ 21.829	€ 22.485	€ 22.965	€ 23.617	€ 23.994	€ 24.582	€ 25.233	€ 1.986
1150 cm	€ 9.612	€ 10.275	€ 10.882	€ 11.545	€ 12.042	€ 14.689	€ 15.359	€ 15.853	€ 16.637	€ 17.056	€ 17.457	€ 18.120	€ 18.789	€ 19.276	€ 21.678	€ 22.178	€ 22.840	€ 23.325	€ 23.982	€ 24.363	€ 24.955	€ 25.612	€ 2.048
1200 cm	€ 9.768	€ 10.436	€ 11.050	€ 11.716	€ 12.217	€ 14.933	€ 15.610	€ 16.110	€ 16.897	€ 17.321	€ 17.726	€ 18.394	€ 19.069	€ 19.561	€ 22.036	€ 22.529	€ 23.195	€ 23.685	€ 24.348	€ 24.732	€ 25.331	€ 25.991	€ 2.111

FS3	€ 298	€ 312	€ 341	€ 374	€ 405	€ 436	€ 467	€ 498	€ 529	€ 560	€ 720	€ 751	€ 782	€ 813	€ 847	€ 878	€ 908	€ 939	€ 970	€ 1.001	€ 1.032	€ 1.063
FS5-A	€ 55	€ 69	€ 81	€ 93	€ 107	€ 119	€ 134	€ 145	€ 160	€ 172	€ 186	€ 198	€ 212	€ 224	€ 238	€ 250	€ 265	€ 277	€ 291	€ 303	€ 317	€ 329
FS5-E	€ 76	€ 95	€ 112	€ 128	€ 148	€ 164	€ 184	€ 200	€ 220	€ 236	€ 256	€ 273	€ 292	€ 309	€ 328	€ 345	€ 364	€ 381	€ 401	€ 417	€ 437	€ 453

Note: If you use an additional rail you have to add a front pillar. It's included in the price.

FS3	Gutter System (for both direction)
FS5-A	Additional Fabric Support Profile (Standard) (for both direction)
FS5-E	Additional Fabric Support Profile (3 Axis) (for both direction)
"FS4 FS10-C"	Additional Rail for COMPACT Series - Al. - 75x120mm (for both direction) Additional Pillar for COMPACT Series - Al. - 80x80mm (for both direction)
FS8	Lighting System

FS8		LED TYPE & MODULE		
		2 LED	3 LED	4 LED
FS8-S	SPOT	€ 125	€ 152	€ 179
FS8-L	LINEAR	€ 179	€ 233	-
FS8-E	3 AXIS	€ 206	€ 268	-

* FS9 Side Beam (Al. 80x130mm) is included in the price
* FS Flexy Plain/3D or Stam 6002 is included in the price
* Motor and Remote control is included in the price
* RAL Colours specified in Aluminium coating catalogue are included in price. Any other RAL colours which are existing in our Supplier's stock can be applied without extra cost.
* Standard colours are RAL9010, RAL7040, RAL1013, RAL7046, RAL9004, RAL3022, RAL120-2, RAL7036, RAL8019, RAL120-5, RAL8025, RAL4001, RAL620-3, RAL5008
* Painting cost has to be min. 125€
* Plastic parts coloured only specified colours

DEDUCTIONS

Price deduction can apply only front pillars, back pillars and side beam. The price of the front pillar, back pillar and side beam can be deducted from options price.

OPTIONS

FS10-C	Extra pillar (80x80mm Al.)	€ 246	pcs
FS10	Extra pillar (100x100mm Al.)	€ 335	pcs
FS10-ST3	Extra pillar (100x100x3mm St.)	€ 401	pcs
FS10-ST5	Extra pillar (100x100x5mm St.)	€ 623	pcs
FS11	Deco ceiling cover	€ 46	m^2
FS12	Izo-Pro ceiling cover (up to 800 cm width)	€ 39	m^2
FS15-C	Side beam pillar (80x80mm - Al)	€ 246	pcs
FS16	Wood effect (*Price difference for standart patterns (up to 700cm projection) (*Can not be applied to steel construction or freestanding products with base plate.)	10% of product price	
FS19	Fix louver	€ 46	lm
FS24	W96 Ceiling Cover	€ 53	m^2
FS25	Fabric support profile special color	€ 11	m^2
FS26	Exclusive fabric difference	€ 31	m^2
FS27	3 Axis lighting fabric support profile difference	€ 9	m^2
FS29-1	Sun Sensor (SUNIS) (with Universal Receiver, it's included in the price)	€ 596	pcs
FS29-2	Wind Sensor (EOLIS RTS) (with Universal Receiver, it's included in the price)	€ 367	pcs
FS29-3	Sun and Wind Sensor (SOLIRIS) (with Universal Receiver, it's included in the price)	€ 459	pcs
FS30	CONNEXOON	€246	pcs
FS31-1	Remote Control - PURE - Telis 1	€55	pcs
FS31-4	Remote Control - PURE - Telis 4	€93	pcs
FS31-16	Remote Control - PURE - Telis 16	€264	pcs
FS32-1	Remote Control - PATIO - Telis 1	€76	pcs
FS32-4	Remote Control - PATIO - Telis 4	€123	pcs
FS33-1	Remote Control - LOUNGE - Telis 1	€93	pcs
FS33-4	Remote Control - LOUNGE - Telis 4	€133	pcs
FS34-1	Remote Control - MODULIS PURE - Telis 1	€125	pcs
FS34-4	Remote Control - MODULIS PURE - Telis 4	€192	pcs
FS35-1	Remote Control - MODULIS LOUNGE - Telis 1	€144	pcs
FS35-4	Remote Control - MODULIS LOUNGE - Telis 4	€220	pcs

*** Can't apply a sensor to the single motor product. For further information please contact with PALMIYE**

EXTENSIONS

Rail	COMPACT - 75x120mm	€ 128	lm
Beam	Al. 40x120mm	€ 42	lm
Beam	Al. 42x150mm	€ 65	lm
Beam	Al. 50x150mm	€ 115	lm
Beam	Al. 80x130mm	€ 61	lm
Beam	Al. 100x150mm	€ 96	lm
Beam	St. 100x150x3mm	€ 190	lm
Beam	St. 100x150x5mm	€ 246	lm
Beam	St. 100x200x3mm	€ 193	lm
Beam	St. 100x200x5mm	€ 293	lm
Fabric protection cover	Al. - 63x___cm	€ 37	m^2
Gutter	Special Profile	€ 28	lm
Pillar	Al. 80x80mm	€ 56	lm
Pillar	Al. 100x100mm	€ 107	lm
Pillar	St. 100x100x3mm	€ 129	lm
Pillar	St. 100x100x5mm	€ 246	lm
Pillar	St. 150x150x3mm	€ 261	lm
Pillar	St. 150x150x5mm	€ 390	lm

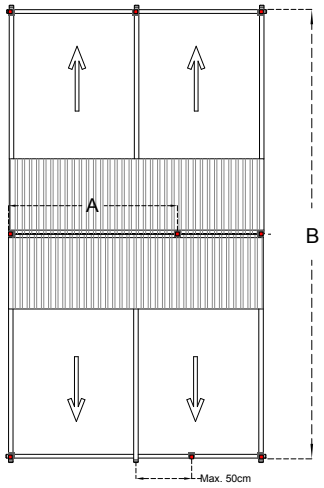

PRICE DIFFERENCE

BEAM GROUP

Back Beam

Standard	Al. 100x150mm		
to	Al. 100x150mm	€ 54	lm
	St. 100x150x3mm	€ 149	lm
	St. 100x150x5mm	€ 205	lm
	St. 100x200x3mm	€ 152	lm
	St. 100x200x5mm	€ 251	lm

Front Beam

Standard	Al. 80x130mm		
to	Al. 100x150mm	€ 35	lm
	St. 100x150x3mm	€ 130	lm
	St. 100x150x5mm	€ 186	lm
	St. 100x200x3mm	€ 133	lm
	St. 100x200x5mm	*€ 233*	*lm*

PILLAR GROUP

Back Pillar

Standard	Al. 100x100mm		
to	St. 100x100x3mm	€ 66	pcs
	St. 100x100x5mm	€ 289	pcs
	St. 150x150x3mm	€ 414	pcs
	St. 150x150x5mm	€ 781	pcs

Front Pillar

Standard	Al. 80x80mm		
to	Al. 100x100mm	€ 88	pcs
	St. 100x100x3mm	€ 155	pcs
	St. 100x100x5mm	€ 377	pcs
	St. 150x150x3mm	€ 502	pcs
	St. 150x150x5mm	€ 870	pcs

STANDARD CONSTRUCTION

WIDTH

PROJECTION	450	500	550	600	650	700	750	800	850	900	950	1000	1050	1100	1150	1200	1250	1300
400																		
600																		
800																		
900																		
1000																		
1100																		
1200																		

BACK PILLAR : Al. 100x100x3mm
BACK BEAM : Al. 100x150x3mm

(in price included)

BACK PILLAR POSITION CHANGE

B \ A	500	550	600	650	700	750	800	850	900
400									
600									
800									
1000									
1200									

BACK PILLAR : Al. 100x100x3mm
BACK BEAM : Al. 100x150x3mm

BACK PILLAR : St. 100x100x3mm
BACK BEAM : St. 100x150x3mm

BACK PILLAR : St. 100x100x5mm
BACK BEAM : St. 100x150x5mm

BACK PILLAR : St. 100x100x5mm
BACK BEAM : Al. 100x200x5mm

(construction price difference needs to be added)

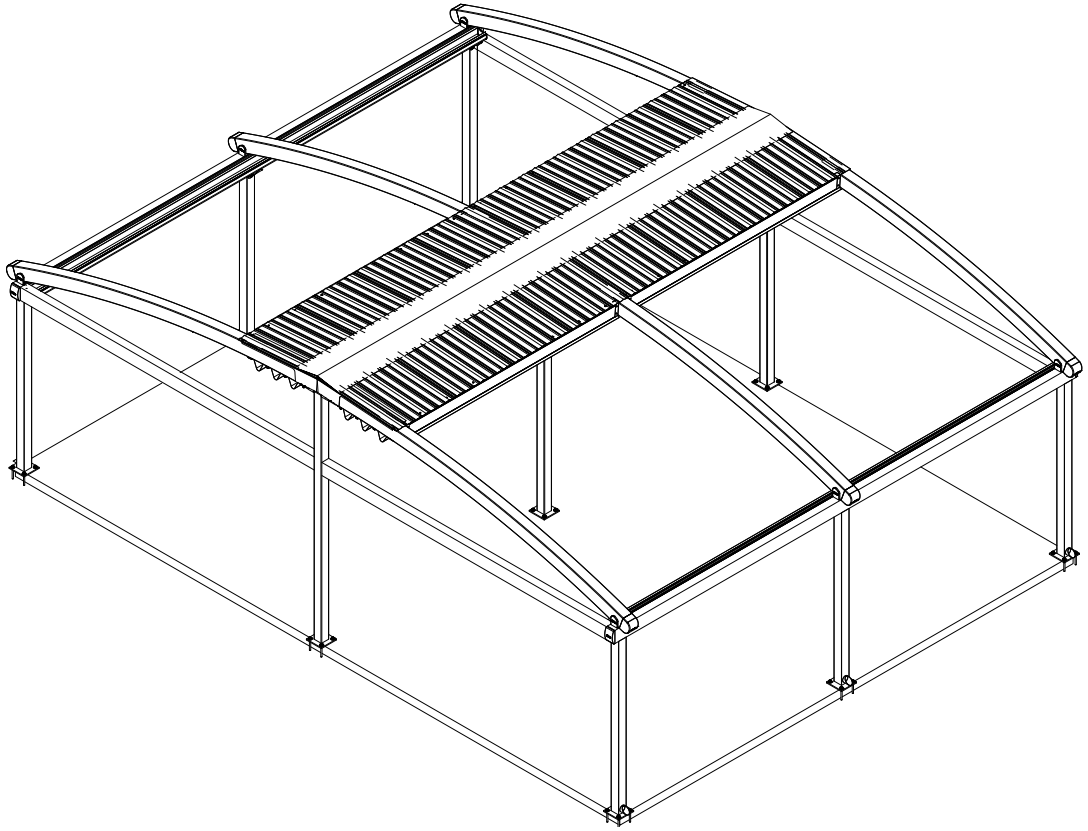

CROWN

I N D E X

PRODUCT FORMS

- **CROWN PLUS** Single Motor

- **CROWN PLUS** Twin Without Middle Pillar

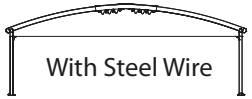

- **CROWN PLUS** Twin

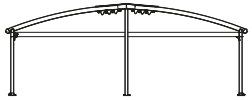

- **CROWN COMPACT** Single Motor

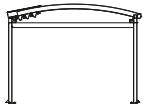

- **CROWN COMPACT** Twin

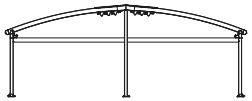

CROWN

PLUS

Single Motor

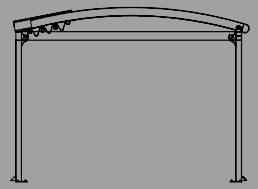

MAXIMUM DIMENSIONS

	WIDTH	PROJECTION
2 RAILS	350 cm	800 cm
3 RAILS	700 cm	800 cm
4 RAILS	800 cm	800cm
	900 cm	700 cm
	1050 cm	600 cm
5 RAILS	1100 cm	600 cm
	1300 cm	500 cm

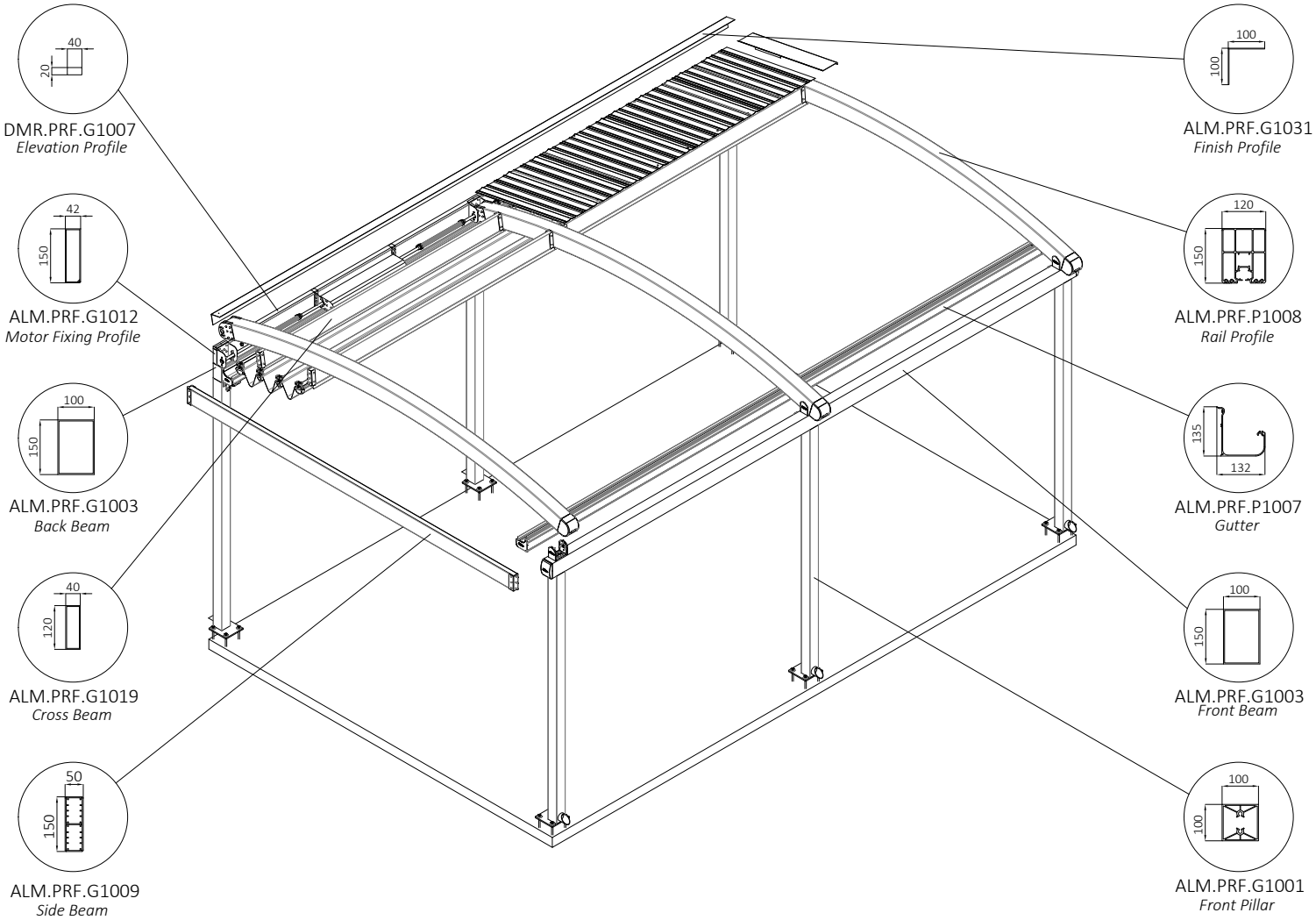

TECHNICAL FEATURES

COLLECTED FABRIC DIMENSIONS

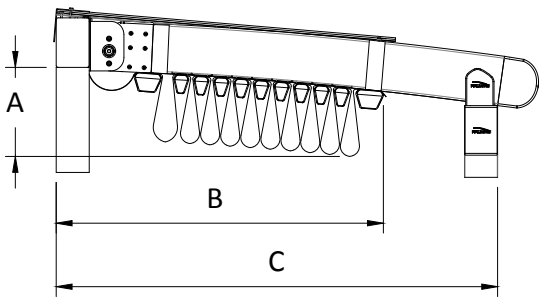

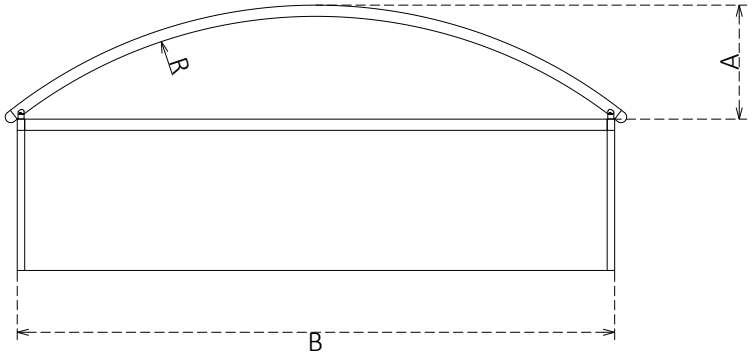

RADIUS CHART

RADIUS	R615	R825

Projection	A		
250	27		
300	33		
350	39		
400	47		
450	56	45	
500	66	53	B
550	77	61	
600		70	
650		80	
700		91	
750		103	
800		116	

*The values are approx. ± 5 cm

Projection cm

No of Fabric Support Profiles	200	250	300	350	400	450	500	550	600	650	700	750	800	C
7	28													84
7		29												91
9			31											104
11				32										110
13					33									123
13						34								130
15							36							143
17								37						149
19									39					162
19										40				169
21											42			182
23												44		195
25													46	208

A B

*Calculated according to a slope of 15%

DRAINAGE CALCULATION

Type	Max. m²
Full	39 m²/pc
Half	18 m²/pc

* per drainage

There should be at least one drainage, each 8 m length gutter.

WIND RESISTANCE

WIDTH (cm)

PROJECTION (cm)	450	500	550	600	650	700	750	800	850	900	950	1000	1050	1100	1150	1200	1250	1300
400	11	11	11	11	11	11	11	11	11	11	11	11	11	11	11	11	11	11
450	11	11	11	11	11	11	11	11	11	11	11	11	11	11	11	11	11	11
500	11	11	11	11	10	10	11	11	11	11	10	10	11	11	11	11	10	10
550	11	11	10	10	10	10	11	10	10	10	10	10	11	10	10	10		
600	10	10	10	9	9	9	10	10	9	9	9	9	10	10				
650	10	9	9	8	8	8	9	9	8	8	8	8						
700	9	8	8	8	7	7	8	8	8	8								
750	9	8	8	8	7	7	8	8										
800	8	8	8	8	7	7	8	8										

All sides open

WIDTH (cm)

PROJECTION (cm)	450	500	550	600	650	700	750	800	850	900	950	1000	1050	1100	1150	1200	1250	1300
400	10	10	9	9	9	9	10	9	9	9	9	9	10	9	9	9	9	9
450	10	9	9	9	9	9	9	9	9	9	9	9	9	9	9	9	9	9
500	10	9	9	9	9	9	9	9	9	9	9	9	9	9	9	9	9	9
550	9	9	9	9	9	9	9	9	9	9	9	9	9	9	9	9		
600	9	9	9	9	8	8	9	9	9	9	8	8	9	9				
650	9	9	9	8	8	8	9	9	8	8	8	8						
700	8	8	8	8	8	8	8	8	8	8								
750	8	8	8	8	8	8	8	8										
800	8	8	8	8	8	8	8	8										

With side enclosure

*The values are given according to the Beaufort scale.

**Calculated for Products with a front height of 250 cm according to Eurocode EN 1991-1-4 Terrain Category 4.

CROWN PLUS Single Motor

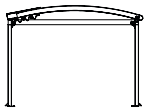

Width

Projection

	2 RAILS			3 RAILS							4 RAILS							5 RAILS					FS4	FS9-S
	250 cm	300 cm	350 cm	400 cm	450 cm	500 cm	550 cm	600 cm	650 cm	700 cm	750 cm	800 cm	850 cm	900 cm	950 cm	1000 cm	1050 cm	1100 cm	1150 cm	1200 cm	1250 cm	1300 cm		
200 cm	€ 5.555	€ 5.843	€ 6.232	€ 7.263	€ 7.652	€ 7.946	€ 8.218	€ 8.490	€ 8.976	€ 9.211	€ 10.147	€ 10.432	€ 10.819	€ 11.108	€ 11.589	€ 11.857	€ 12.126	€ 12.881	€ 13.090	€ 13.253	€ 14.829	€ 15.273	€ 734	€ 49
250 cm	€ 5.790	€ 6.220	€ 6.599	€ 7.547	€ 7.946	€ 8.302	€ 8.713	€ 8.991	€ 9.358	€ 9.600	€ 10.572	€ 11.005	€ 11.547	€ 11.703	€ 12.101	€ 12.378	€ 12.786	€ 13.567	€ 13.780	€ 13.947	€ 15.595	€ 16.045	€ 811	€ 68
300 cm	€ 6.201	€ 6.679	€ 7.103	€ 8.143	€ 8.603	€ 9.016	€ 9.471	€ 9.796	€ 10.207	€ 10.489	€ 11.572	€ 12.053	€ 12.655	€ 12.862	€ 13.296	€ 13.619	€ 14.072	€ 14.938	€ 15.192	€ 15.390	€ 17.213	€ 17.711	€ 887	€ 87
350 cm	€ 6.579	€ 6.932	€ 7.366	€ 8.578	€ 9.053	€ 9.511	€ 9.847	€ 10.309	€ 10.731	€ 11.018	€ 12.146	€ 12.638	€ 13.261	€ 13.470	€ 14.082	€ 14.413	€ 14.746	€ 15.641	€ 16.030	€ 16.231	€ 18.137	€ 18.503	€ 963	€ 10
400 cm	€ 6.822	€ 7.185	€ 7.627	€ 8.869	€ 9.358	€ 9.878	€ 10.222	€ 10.693	€ 11.123	€ 11.418	€ 12.583	€ 13.083	€ 13.715	€ 13.940	€ 14.610	€ 14.950	€ 15.292	€ 16.212	€ 16.607	€ 16.812	€ 18.777	€ 19.152	€ 1.040	€ 12
450 cm	€ 7.074	€ 7.444	€ 7.896	€ 9.170	€ 9.672	€ 10.255	€ 10.609	€ 11.089	€ 11.527	€ 11.830	€ 13.030	€ 13.539	€ 14.185	€ 14.419	€ 15.151	€ 15.499	€ 15.847	€ 16.797	€ 17.197	€ 17.403	€ 19.429	€ 19.814	€ 1.116	€ 14
500 cm	€ 7.318	€ 7.698	€ 8.160	€ 9.463	€ 9.979	€ 10.627	€ 10.987	€ 11.475	€ 11.924	€ 12.233	€ 13.470	€ 13.989	€ 14.650	€ 14.891	€ 15.683	€ 16.041	€ 16.398	€ 17.370	€ 17.777	€ 17.989	€ 20.074	€ 20.469	€ 1.192	€ 16
550 cm	€ 7.745	€ 8.304	€ 8.811	€ 10.219	€ 10.795	€ 11.485	€ 12.020	€ 12.425	€ 13.048	€ 13.397	€ 14.763	€ 15.331	€ 16.055	€ 16.485	€ 17.135	€ 17.556	€ 18.089	€ 19.161	€ 19.602	€ 19.842			€ 1.269	€ 18
600 cm	€ 7.995	€ 8.564	€ 9.083	€ 10.518	€ 11.108	€ 11.862	€ 12.408	€ 12.822	€ 13.451	€ 13.808	€ 15.211	€ 15.788	€ 16.526	€ 16.966	€ 17.695	€ 18.106	€ 18.647	€ 19.745					€ 1.345	€ 20
650 cm	€ 8.243	€ 8.824	€ 9.348	€ 10.815	€ 11.421	€ 12.235	€ 12.791	€ 13.213	€ 13.852	€ 14.159	€ 15.590	€ 16.174	€ 16.918	€ 17.371	€ 18.233	€ 18.654							€ 1.421	€ 21
700 cm	€ 8.491	€ 9.078	€ 9.612	€ 11.112	€ 11.728	€ 12.609	€ 13.171	€ 13.604	€ 14.252	€ 14.562	€ 16.032	€ 16.626	€ 18.700	€ 19.216									€ 1.497	€ 23
750 cm	€ 8.738	€ 9.333	€ 9.875	€ 11.408	€ 12.035	€ 12.982	€ 13.550	€ 13.995	€ 14.652	€ 14.965	€ 16.475	€ 17.078											€ 1.574	€ 25
800 cm	€ 8.985	€ 9.588	€ 10.139	€ 11.703	€ 12.341	€ 13.747	€ 14.328	€ 15.749	€ 16.503	€ 16.909	€ 18.613	€ 19.315											€ 1.650	€ 27

FS3	€ 298	€ 312	€ 341	€ 374	€ 405	€ 436	€ 467	€ 498	€ 529	€ 560	€ 720	€ 751	€ 782	€ 813	€ 847	€ 878	€ 908	€ 939	€ 970	€ 1.001	€ 1.032	€ 1.063
FS5-A	€ 27	€ 35	€ 41	€ 46	€ 54	€ 60	€ 67	€ 73	€ 80	€ 86	€ 93	€ 99	€ 106	€ 112	€ 119	€ 125	€ 132	€ 138	€ 145	€ 151	€ 159	€ 165
FS5-E	€ 38	€ 48	€ 56	€ 64	€ 74	€ 82	€ 92	€ 100	€ 110	€ 118	€ 128	€ 136	€ 146	€ 154	€ 164	€ 172	€ 182	€ 190	€ 200	€ 209	€ 218	€ 227

Note: 50x150mm Al. Side beam is included in the price. For other option which is 100x150mm Al. Special side beam is extra cost.

FS3	Gutter System (for both direction)
FS5-A	Additional Fabric Support Profile (Standard) (for both direction)
FS5-E	Additional Fabric Support Profile (3 Axis) (for both direction)
FS4	Additional Rail for PLUS Series - Al. - 120x150mm (for both direction)
FS8	Lighting System
FS9-S*	Price difference for Side Beam for PLUS Series - Al. - 100x150mm (Special)

FS8		LED TYPE & MODULE		
		2 LED	3 LED	4 LED
FS8-S	SPOT	€ 125	€ 152	€ 179
FS8-L	LINEAR	€ 179	€ 233	-
FS8-E	3 AXIS	€ 206	€ 268	-

* FS9 Side Beam (Al. 50x150mm) is included in the price. For other option which is 100x150mm Al. Special side beam is extra cost.
* FS Flexy Plain/3D or Stam 6002 is included in the price
* Motor and Remote control is included in the price
* RAL Colours specified in Aluminium coating catalogue are included in price. Any other RAL colours which are existing in our Supplier's stock can be applied without extra cost.
* Standard colours are RAL9010, RAL7040, RAL1013, RAL7046, RAL9004, RAL3022, RAL120-2, RAL7036, RAL8019, RAL120-5, RAL8025, RAL4001, RAL620-3, RAL5008
* Painting cost has to be min. 125€
* Plastic parts coloured only specified colours

OPTIONS

FS10	Extra pillar (100x100mm Al.)	€ 335	pcs
FS10-ST3	Extra pillar (100x100x3mm St.)	€ 401	pcs
FS10-ST5	Extra pillar (100x100x5mm St.)	€ 623	pcs
FS11	Deco ceiling cover	€ 46	m^2
FS12	Izo-Pro ceiling cover (up to 800 cm width)	€ 39	m^2
FS15	Side beam pillar (50x100mm - Al)	€ 174	pcs
FS15-B	Side beam pillar (100x100mm - Al)	€ 335	pcs
FS16	Wood effect (*Price difference for standart patterns (up to 700cm projection) (*Can not be applied to steel construction or freestanding products with base plate.)	10% of product price	
FS19	Fix louver	€ 46	lm
FS23	External Square Downpipe	€ 205	pcs
FS24	W96 Ceiling Cover	€ 53	m^2
FS25	Fabric support profile special color	€ 11	m^2
FS26	Exclusive fabric difference	€ 31	m^2
FS27	3 Axis lighting fabric support profile difference	€ 9	m^2
FS29-1	Sun Sensor (SUNIS) (with Universal Receiver, it's included in the price)	€ 596	pcs
FS29-2	Wind Sensor (EOLIS RTS) (with Universal Receiver, it's included in the price)	€ 367	pcs
FS29-3	Sun and Wind Sensor (SOLIRIS) (with Universal Receiver, it's included in the price)	€ 459	pcs
FS30	CONNEXOON	€246	pcs
FS31-1	Remote Control - PURE - Telis 1	€55	pcs
FS31-4	Remote Control - PURE - Telis 4	€93	pcs
FS31-16	Remote Control - PURE - Telis 16	€264	pcs
FS32-1	Remote Control - PATIO - Telis 1	€76	pcs
FS32-4	Remote Control - PATIO - Telis 4	€123	pcs
FS33-1	Remote Control - LOUNGE - Telis 1	€93	pcs
FS33-4	Remote Control - LOUNGE - Telis 4	€133	pcs
FS34-1	Remote Control - MODULIS PURE - Telis 1	€125	pcs
FS34-4	Remote Control - MODULIS PURE - Telis 4	€192	pcs
FS35-1	Remote Control - MODULIS LOUNGE - Telis 1	€144	pcs
FS35-4	Remote Control - MODULIS LOUNGE - Telis 4	€220	pcs

*** Can't apply a sensor to the single motor product. For further information please contact with PALMIYE**

BACK PILLAR POSITION CHANGE

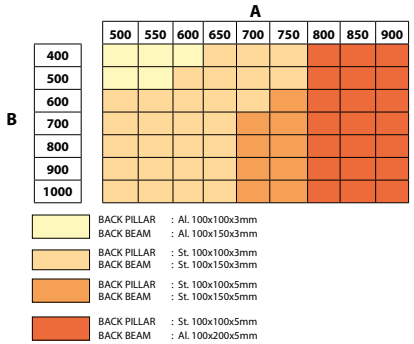

(construction price difference needs to be added)

FRONT PILLAR POSITION CHANGE

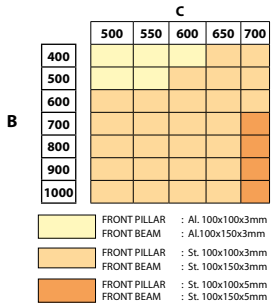

(construction price difference needs to be added)

STANDARD CONSTRUCTION

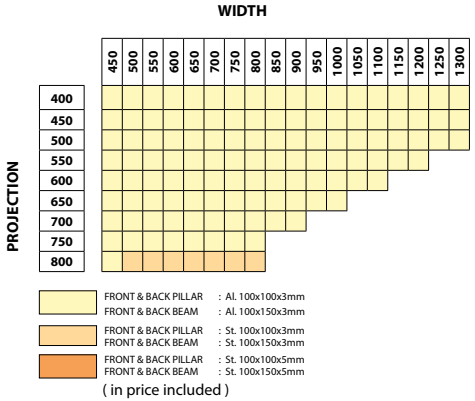

(in price included)

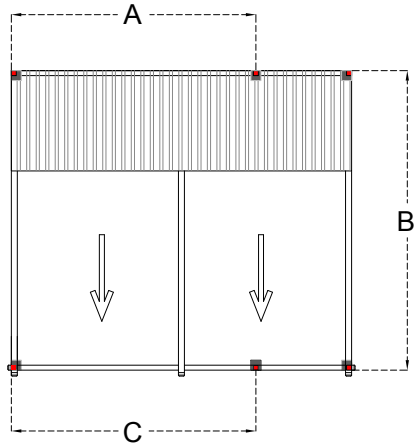

EXTENSIONS

Rail	PLUS - 120x150mm	€ 209	lm
Beam	Al. 100x150mm	€ 96	lm
Beam	St. 100x150x3mm	€ 190	lm
Beam	St. 100x150x5mm	€ 246	lm
Beam	St. 100x200x3mm	€ 193	lm
Beam	St. 100x200x5mm	€ 293	lm
Fabric protection cover	Al. - 63x___cm	€ 37	m^2
Gutter	Special Profile	€ 28	lm
Pillar	Al. 100x100mm	€ 107	lm
Pillar	St. 100x100x3mm	€ 129	lm
Pillar	St. 100x100x5mm	€ 246	lm
Pillar	St. 150x150x3mm	€ 261	lm
Pillar	St. 150x150x5mm	€ 390	lm

Max. Al. front pillar height is 280 cm
Max. St 3mm front pillar height is 380 cm

PRICE DIFFERENCE

		BEAM GROUP		
	Standard	**Al. 100x150mm**		
Beam	to	St. 100x150x3mm	€ 95	lm
		St. 100x150x5mm	€ 151	lm
		St. 100x200x3mm	€ 98	lm
		St. 100x200x5mm	€ 197	lm
		PILLAR GROUP		
	Standard	**Al. 100x100mm**		
Pillar	to	St. 100x100x3mm	€ 66	pcs
		St. 100x100x5mm	€ 289	pcs
		St. 150x150x3mm	€ 414	pcs
		St. 150x150x5mm	€ 781	pcs

CROWN

PLUS

Twin Without Middle Pillar

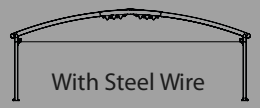

With Steel Wire

MAXIMUM DIMENSIONS

	WIDTH	PROJECTION
2 RAILS	400 cm	1000 cm
3 RAILS	800 cm	1000 cm
4 RAILS	1200 cm	1000 cm
5 RAILS	1300 cm	1000 cm

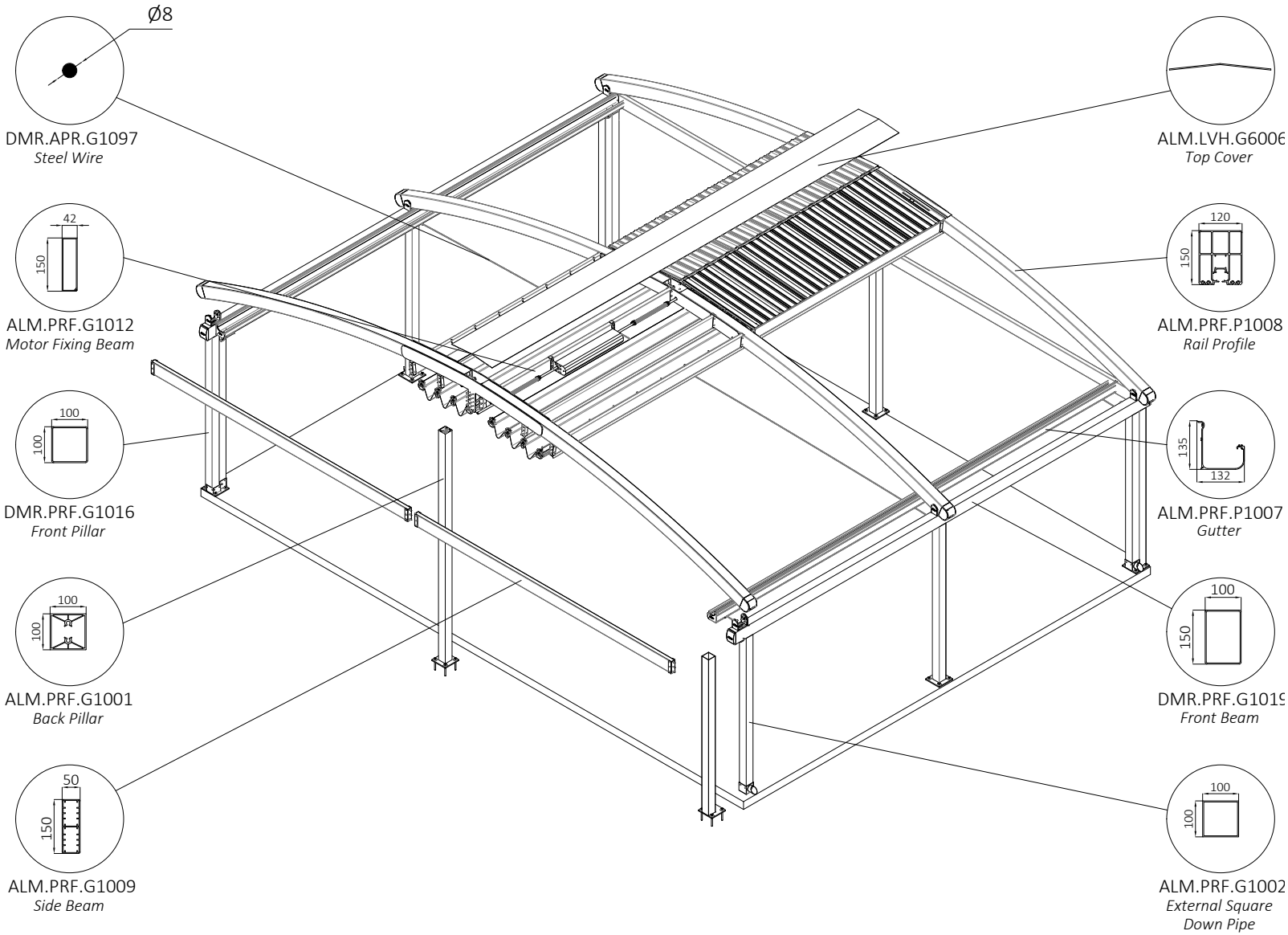

TECHNICAL FEATURES

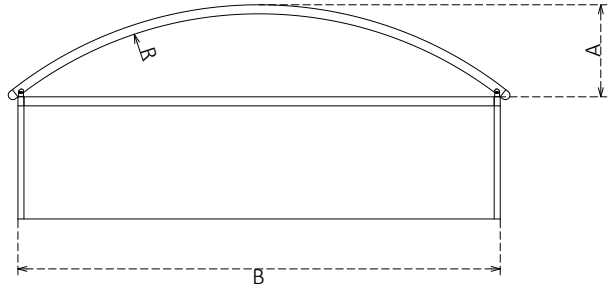

COLLECTED FABRIC DIMENSIONS

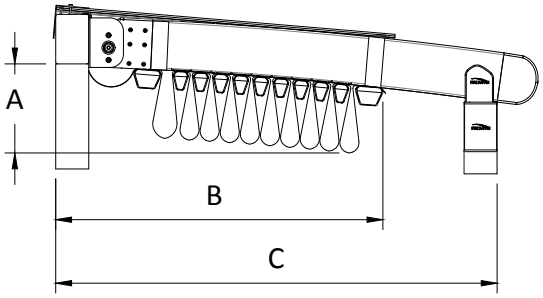

No of Fabric Support Profiles	Projection cm 200	250	300	350	400	450	500	C
5	30							68
6		31						74
7			32					81
9				34				94
10					35			100
11						36		107
13							38	120
				A				B

*Calculated according to a slope of 15%

RADIUS CHART

RADIUS	650	850	1500

Projection	A			B
250	27			
300	32			
350	39			
400	47			
450	55	46		
500	65	54		
550	76	62		
600		71		
650		82		
700		93		
750		105	63	
800		118	69	
850		133	76	
900			84	
950			92	
1000			101	

*The values are approx. ± 5 cm

WIND RESISTANCE

WIDTH (cm)

PROJECTION (cm)	450	500	550	600	650	700	750	800	850	900	950	1000	1050	1100	1150	1200	1250	1300
400	11	11	11	11	11	11	11	11	11	11	11	11	11	11	11	11	11	11
500	11	11	11	11	11	11	10	10	11	11	11	11	11	10	10	10	11	11
600	11	11	10	10	10	9	9	9	10	10	10	10	9	9	9	9	10	10
700	10	9	9	9	8	8	8	8	9	9	8	8	8	8	8	8	8	8
800	9	8	8	8	7	7	7	7	8	8	7	7	7	7	7	7	7	7
900	8	8	7	7	7	7	7	7	7	7	7	7	7	7	7	7	7	7
1000	8	8	7	7	7	7	7	7	7	7	7	7	7	7	7	7	7	7

All sides open

WIDTH (cm)

PROJECTION (cm)	450	500	550	600	650	700	750	800	850	900	950	1000	1050	1100	1150	1200	1250	1300
400	11	11	11	11	11	11	11	11	11	11	11	11	11	11	11	11	11	11
500	11	11	11	11	11	11	11	10	11	11	11	11	11	11	11	10	11	11
600	11	11	11	11	11	10	10	10	11	11	11	11	10	10	10	10	11	11
700	10	10	10	10	10	9	9	9	10	10	10	10	9	9	9	9	10	10
800	10	9	9	9	9	9	8	8	9	9	9	9	9	8	8	8	9	9
900	8	8	8	8	8	8	8	8	8	8	8	8	8	8	8	8	8	8
1000	8	8	8	8	8	8	8	8	8	8	8	8	8	8	8	8	8	8

With side enclosure

*The values are given according to the Beaufort scale.

**Calculated for Products with a front height of 250 cm according to Eurocode EN 1991-1-4 Terrain Category 4.

*** You can ask for new calculations for special designs.

DRAINAGE CALCULATION

Type	Max. m^2
Full	39 m^2/pc
Half	18 m^2/pc

* per drainage

There should be at least one drainage, each 8 m length gutter.

CROWN PLUS Twin Without Middle Pillar

With Steel Wire

idth

	2 RAILS				3 RAILS								4 RAILS								5 RAILS		FS4	FS9-S
	250 cm	300 cm	350 cm	400 cm	450 cm	500 cm	550 cm	600 cm	650 cm	700 cm	750 cm	800 cm	850 cm	900 cm	950 cm	1000 cm	1050 cm	1100 cm	1150 cm	1200 cm	1250 cm	1300 cm		
400 cm	€ 8.887	€ 9.326	€ 10.174	€ 10.619	€ 12.540	€ 12.979	€ 13.425	€ 13.864	€ 14.712	€ 15.157	€ 15.675	€ 16.113	€ 17.651	€ 18.078	€ 18.907	€ 19.333	€ 19.755	€ 20.181	€ 20.603	€ 21.029	€ 23.474	€ 24.139	€ 1.040	€ 125
450 cm	€ 9.127	€ 9.686	€ 10.430	€ 10.881	€ 12.902	€ 13.348	€ 13.914	€ 14.361	€ 15.104	€ 15.552	€ 16.080	€ 16.641	€ 18.275	€ 18.712	€ 19.434	€ 19.867	€ 20.413	€ 20.846	€ 21.275	€ 21.709	€ 24.255	€ 24.925	€ 1.116	€ 144
500 cm	€ 9.367	€ 10.044	€ 10.685	€ 11.142	€ 13.264	€ 13.715	€ 14.404	€ 14.855	€ 15.495	€ 15.947	€ 16.484	€ 17.167	€ 18.898	€ 19.345	€ 19.960	€ 20.399	€ 21.070	€ 21.509	€ 21.948	€ 22.388	€ 25.034	€ 25.710	€ 1.192	€ 163
550 cm	€ 9.740	€ 10.456	€ 11.130	€ 11.622	€ 13.875	€ 14.362	€ 15.085	€ 15.573	€ 16.247	€ 16.735	€ 17.305	€ 18.024	€ 19.887	€ 20.363	€ 21.019	€ 21.492	€ 22.196	€ 22.668	€ 23.144	€ 23.620	€ 26.395	€ 27.108	€ 1.269	€ 181
600 cm	€ 10.112	€ 10.869	€ 11.576	€ 12.101	€ 14.486	€ 15.010	€ 15.766	€ 16.290	€ 16.997	€ 17.523	€ 18.126	€ 18.882	€ 20.876	€ 21.383	€ 22.078	€ 22.584	€ 23.322	€ 23.828	€ 24.341	€ 24.853	€ 27.756	€ 28.505	€ 1.345	€ 200
650 cm	€ 10.474	€ 11.125	€ 11.838	€ 12.484	€ 14.973	€ 15.503	€ 16.153	€ 16.799	€ 17.515	€ 18.047	€ 18.660	€ 19.421	€ 21.519	€ 22.034	€ 22.846	€ 23.364	€ 23.996	€ 24.510	€ 25.142	€ 25.661	€ 28.667	€ 29.313	€ 1.421	€ 219
700 cm	€ 10.839	€ 11.382	€ 12.101	€ 12.870	€ 15.461	€ 15.999	€ 16.541	€ 17.309	€ 18.034	€ 18.572	€ 19.194	€ 19.963	€ 22.164	€ 22.688	€ 23.615	€ 24.145	€ 24.670	€ 25.195	€ 25.945	€ 26.469	€ 29.579	€ 30.122	€ 1.497	€ 238
750 cm	€ 11.090	€ 11.639	€ 12.367	€ 13.142	€ 15.838	€ 16.383	€ 16.935	€ 17.709	€ 18.441	€ 18.987	€ 19.615	€ 20.390	€ 22.698	€ 23.228	€ 24.165	€ 24.702	€ 25.234	€ 25.766	€ 26.525	€ 27.055	€ 30.273	€ 30.822	€ 1.574	€ 257
800 cm	€ 11.340	€ 11.895	€ 12.631	€ 13.413	€ 16.565	€ 17.159	€ 17.726	€ 18.535	€ 19.300	€ 19.882	€ 20.544	€ 21.352	€ 23.794	€ 24.359	€ 25.331	€ 25.901	€ 26.472	€ 27.036	€ 27.831	€ 28.396	€ 31.746	€ 32.328	€ 1.650	€ 276
850 cm	€ 11.596	€ 12.160	€ 12.905	€ 13.694	€ 16.949	€ 17.552	€ 18.127	€ 18.941	€ 19.715	€ 20.304	€ 20.975	€ 21.792	€ 24.335	€ 24.908	€ 25.889	€ 26.466	€ 27.042	€ 27.615	€ 28.418	€ 28.990	€ 32.445	€ 33.034	€ 1.726	€ 295
900 cm	€ 11.853	€ 12.426	€ 13.177	€ 13.975	€ 17.335	€ 17.946	€ 18.527	€ 19.348	€ 20.131	€ 20.891	€ 21.601	€ 22.458	€ 24.875	€ 25.458	€ 26.449	€ 27.305	€ 27.890	€ 28.475	€ 29.285	€ 29.868	€ 33.145	€ 33.738	€ 1.803	€ 313
950 cm	€ 12.107	€ 12.686	€ 13.446	€ 14.251	€ 17.717	€ 18.335	€ 18.921	€ 19.751	€ 20.541	€ 21.310	€ 22.026	€ 22.889	€ 25.416	€ 26.004	€ 27.002	€ 27.867	€ 28.459	€ 29.050	€ 29.868	€ 30.460	€ 33.841	€ 34.444	€ 1.879	€ 332
1000 cm	€ 12.360	€ 12.945	€ 13.713	€ 14.525	€ 18.118	€ 18.755	€ 19.395	€ 20.261	€ 21.086	€ 21.727	€ 22.449	€ 24.545	€ 27.572	€ 28.238	€ 27.824	€ 28.428	€ 29.025	€ 29.622	€ 32.192	€ 32.856	€ 36.799	€ 37.483	€ 1.955	€ 351

FS3	€ 298	€ 312	€ 341	€ 374	€ 405	€ 436	€ 467	€ 498	€ 529	€ 560	€ 720	€ 751	€ 782	€ 813	€ 847	€ 878	€ 908	€ 939	€ 970	€ 1.001	€ 1.032	€ 1.063
FS5-A	€ 55	€ 69	€ 81	€ 93	€ 107	€ 119	€ 134	€ 145	€ 160	€ 172	€ 186	€ 198	€ 212	€ 224	€ 238	€ 250	€ 265	€ 277	€ 291	€ 303	€ 317	€ 329
FS5-E	€ 76	€ 95	€ 112	€ 128	€ 148	€ 164	€ 184	€ 200	€ 220	€ 236	€ 256	€ 273	€ 292	€ 309	€ 328	€ 345	€ 364	€ 381	€ 401	€ 417	€ 437	€ 453

FS3	Gutter System (for both direction)
FS5-A	Additional Fabric Support Profile (Standard) (for both direction)
FS5-E	Additional Fabric Support Profile (3 Axis) (for both direction)
FS4	Additional Rail for PLUS Series - Al. - 120x150mm (for both direction)
FS8	Lighting System
FS9-S*	Price difference for Side Beam for PLUS Series - Al. - 100x150mm (Special)

FS8		LED TYPE & MODULE		
		2 LED	3 LED	4 LED
FS8-S	SPOT	€ 125	€ 152	€ 179
FS8-L	LINEAR	€ 179	€ 233	-
FS8-E	3 AXIS	€ 206	€ 268	-

Note: 50x150mm Al. Side beam is included in the price. For other option which is 100x150mm Al. Special side beam is extra cost.

* FS9 Side Beam (Al. 50x150mm) is included in the price. For other option which is 100x150mm Al. Special side beam is extra cost.
* FS Flexy Plain/3D or Stam 6002 is included in the price
* Motor and Remote control is included in the price
* RAL Colours specified in Aluminium coating catalogue are included in price. Any other RAL colours which are existing in our Supplier's stock can be applied without extra cost.
* Standard colours are RAL9010, RAL7040, RAL1013, RAL7046, RAL9004, RAL3022 RAL120-2, RAL7036, RAL8019, RAL120-5, RAL8025, RAL4001, RAL620-3, RAL5008
* Painting cost has to be min. 125€
* Plastic parts coloured only specified colours

DEDUCTIONS
Price deduction can apply only front pillars, back pillars and side beam. The price of the front pillar, back pillar and side beam can be deducted from options price.

OPTIONS

FS10	Extra pillar (100x100mm Al.)	€ 335	pcs
FS10-ST3	Extra pillar (100x100x3mm St.)	€ 401	pcs
FS10-ST5	Extra pillar (100x100x5mm St.)	€ 623	pcs
FS11	Deco ceiling cover	€ 46	m^2
FS12	Izo-Pro ceiling cover (up to 800 cm width)	€ 39	m^2
FS15	Side beam pillar (50x100mm - Al)	€ 174	pcs
FS15-B	Side beam pillar (100x100mm - Al)	€ 335	pcs
FS16	Wood effect (*Price difference for standart patterns (up to 700cm projection) (*Can not be applied to steel construction or freestanding prod-ucts with base plate.)	10% of product price	
FS19	Fix louver	€ 46	lm
FS23	External Square Downpipe	€ 205	pcs
FS24	W96 Ceiling Cover	€ 53	m^2
FS25	Fabric support profile special color	€ 11	m^2
FS26	Exclusive fabric difference	€ 31	m^2
FS27	3 Axis lighting fabric support profile difference	€ 9	m^2
FS29-1	Sun Sensor (SUNIS) (with Universal Receiver, it's included in the price)	€ 596	pcs
FS29-2	Wind Sensor (EOLIS RTS) (with Universal Receiver, it's included in the price)	€ 367	pcs
FS29-3	Sun and Wind Sensor (SOLIRIS) (with Universal Receiver, it's included in the price)	€ 459	pcs
FS30	CONNEXOON	€246	pcs
FS31-1	Remote Control - PURE - Telis 1	€55	pcs
FS31-4	Remote Control - PURE - Telis 4	€93	pcs
FS31-16	Remote Control - PURE - Telis 16	€264	pcs
FS32-1	Remote Control - PATIO - Telis 1	€76	pcs
FS32-4	Remote Control - PATIO - Telis 4	€123	pcs
FS33-1	Remote Control - LOUNGE - Telis 1	€93	pcs
FS33-4	Remote Control - LOUNGE - Telis 4	€133	pcs
FS34-1	Remote Control - MODULIS PURE - Telis 1	€125	pcs
FS34-4	Remote Control - MODULIS PURE - Telis 4	€192	pcs
FS35-1	Remote Control - MODULIS LOUNGE - Telis 1	€144	pcs
FS35-4	Remote Control - MODULIS LOUNGE - Telis 4	€220	pcs

*** Can't apply a sensor to the single motor product. For further information please contact with PALMIYE**

EXTENSIONS

Rail	PLUS - 120x150mm	€ 209	lm
Beam	Al. 100x150mm	€ 96	lm
Beam	St. 100x150x3mm	€ 190	lm
Beam	St. 100x150x5mm	€ 246	lm
Beam	St. 100x200x3mm	€ 193	lm
Beam	St. 100x200x5mm	€ 293	lm
Fabric protection cover	Al. - 63x___cm	€ 37	m^2
Gutter	Special Profile	€ 28	lm
Pillar	Al. 100x100mm	€ 107	lm
Pillar	St. 100x100x3mm	€ 129	lm
Pillar	St. 100x100x5mm	€ 246	lm
Pillar	St. 150x150x3mm	€ 261	lm
Pillar	St. 150x150x5mm	€ 390	lm

Max. Al. front pillar height is 280 cm
Max. St 3mm front pillar height is 380 cm
Max. St 5mm front pillar height is 480 cm

STANDARD CONSTRUCTION

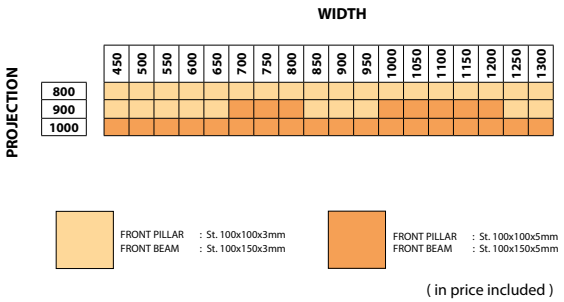

(in price included)

PRICE DIFFERENCE

BEAM GROUP

Front Beam	**Standard**	**St. 100x150x3mm**		
	to	St. 100x150x5mm	€ 56	lm
		St. 100x200x3mm	€ 3	lm
		St. 100x200x5mm	€ 103	lm

PILLAR GROUP

Front Pillar	**Standard**	**St. 100x100x3mm**		
	to	St. 100x100x5mm	€ 222	pcs
		St. 150x150x3mm	€ 347	pcs
		St. 150x150x5mm	€ 715	pcs

CROWN PLUS Twin

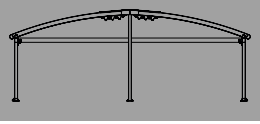

MAXIMUM DIMENSIONS

	WIDTH	PROJECTION
2 RAILS	400 cm	1600 cm
3 RAILS	800 cm	1600 cm
4 RAILS	1200 cm	1600 cm
5 RAILS	1300 cm	1400 cm

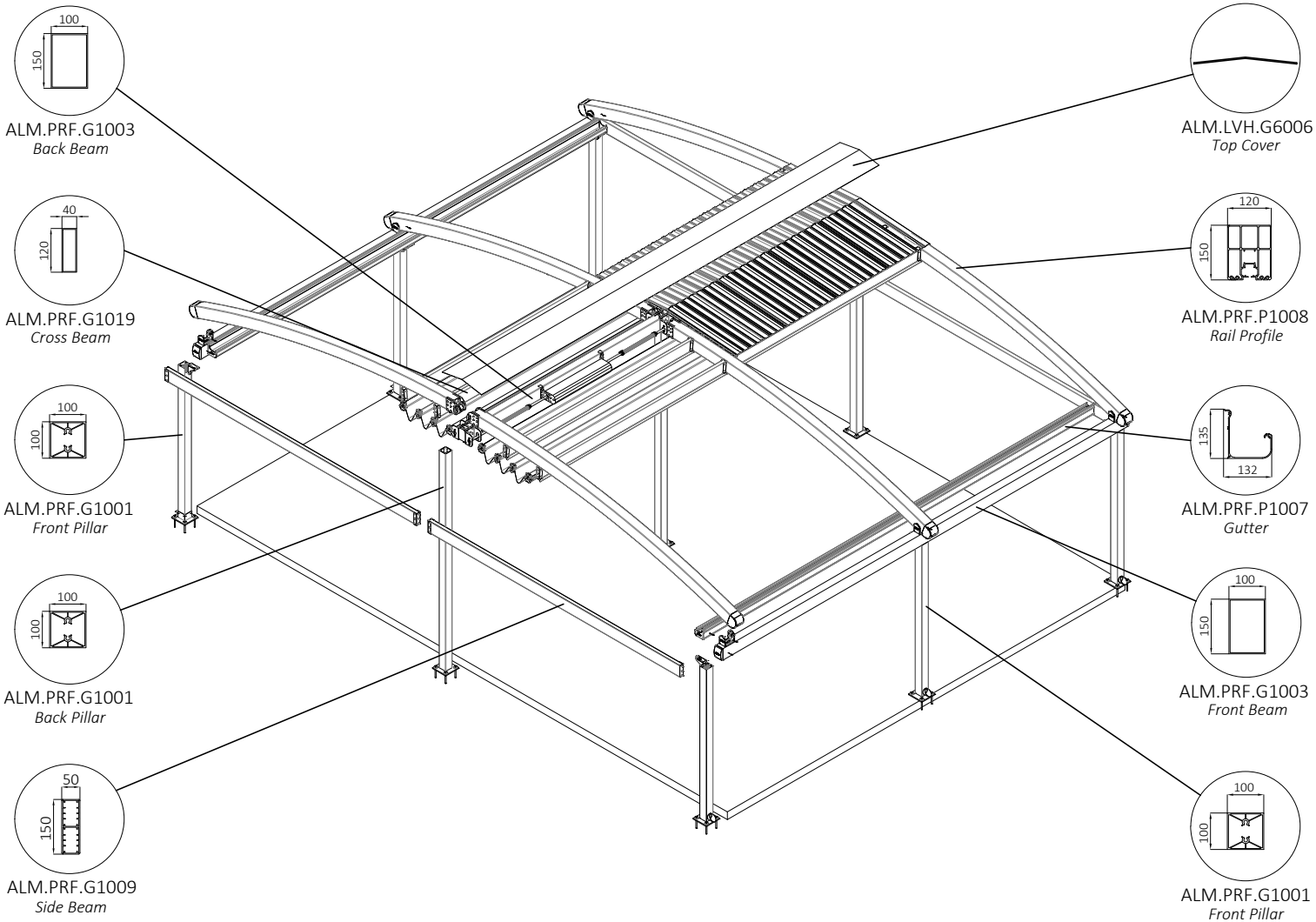

TECHNICAL FEATURES

COLLECTED FABRIC DIMENSIONS

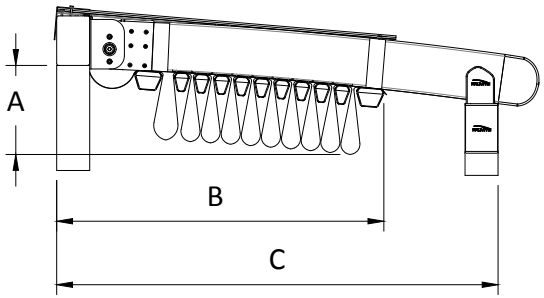

Projection cm

No of Fabric Support Profiles	200	250	300	350	400	450	500	550	600	650	700	750	800	C
5	30													68
6		31												74
7			32											81
9				34										94
10					35									100
11						36								107
13							38							120
14								39						126
15									40					133
17										42				146
18											43			152
19												44		159
21													46	172
	A													B

*Calculated according to a slope of 15%

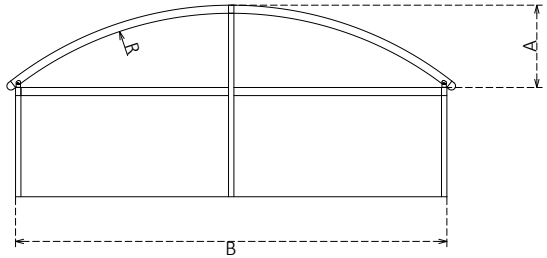

DRAINAGE CALCULATION

Type	Max. m²
Full	39 m²/pc
Half	18 m²/pc

* per drainage

There should be at least one drainage, each 8 m length gutter.

RADIUS CHART

RADIUS	R615	R825	R1500	R2850

Projection	A				B
250	34				
300	41				
350	49				
400	58				
450	68	56			
500	81	65			
550	94	74			
600		85			
650		96			
700		109			
750		122	75		
800		137	83		
850		153	91		
900			100		
950			109		
1000			118		
1050			128		
1100			139		
1150			150	89	
1200			161	94	
1250			174	101	
1300				107	
1350				114	
1400				120	
1450				128	
1500				135	
1550				142,5	
1600				150	

*The values are approx. ± 5 cm

WIND RESISTANCE

WIDTH (cm)

PROJECTION (cm)	450	500	550	600	650	700	750	800	850	900	950	1000	1050	1100	1150	1200	1250	1300
800	11	11	11	11	10	10	9	9	11	11	10	10	10	10	9	9	10	10
900	11	11	11	11	10	9	9	8	11	11	10	10	9	9	9	8	10	10
1000	11	11	11	10	9	8	8	8	11	10	9	9	8	8	8	8	9	9
1100	11	10	10	10	9	8	8	7	10	10	9	9	8	8	8	7	9	9
1200	10	10	10	9	8	7	7	7	10	9	8	8	7	7	7	7	8	8
1300	9	9	9	8	8	7	7	7	9	8	8	8	7	7	7	7	8	8
1400	9	9	8	8	7	7	7	7	9	8	7	7	7	7	7	7	7	7
1500	8	8	7	7	7	7	7	7	8	7	7	7	7	7	7	7	7	
1600	8	7	7	7	7	7	7	7	7	7	7	7	7	7	7	7		

All sides open

WIDTH (cm)

PROJECTION (cm)	450	500	550	600	650	700	750	800	850	900	950	1000	1050	1100	1150	1200	1250	1300
800	11	10	10	10	9	8	8	8	10	10	9	9	8	8	8	8	9	9
900	10	10	10	10	9	8	8	8	10	10	9	9	8	8	8	8	9	9
1000	10	10	9	9	8	8	8	8	10	9	8	8	8	8	8	8	8	8
1100	9	9	9	9	7	7	7	7	9	9	7	7	7	7	7	7	7	7
1200	9	8	8	8	7	7	7	7	8	8	7	7	7	7	7	7	7	7
1300	8	8	7	7	7	7	7	7	8	7	7	7	7	7	7	7	7	7
1400	7	7	7	7	7	7	7	7	7	7	7	7	7	7	7	7	7	7
1500	7	7	7	7	7	7	7	7	7	7	7	7	7	7	7	7	7	
1600	7	7	7	7	7	7	7	7	7	7	7	7	7	7	7	7		

With side enclosure

*The values are given according to the Beaufort scale.

**Calculated for Products with a front height of 250 cm according to Eurocode EN 1991-1-4 Terrain Category 4.

*** You can ask for new calculations for special designs.

CROWN PLUS Twin

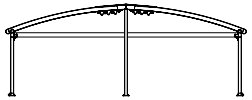

lth

	2 RAILS				3 RAILS								4 RAILS								5 RAILS		FS4	FS9-S
	250 cm	300 cm	350 cm	400 cm	450 cm	500 cm	550 cm	600 cm	650 cm	700 cm	750 cm	800 cm	850 cm	900 cm	950 cm	1000 cm	1050 cm	1100 cm	1150 cm	1200 cm	1250 cm	1300 cm		
300 cm	€ 8.572	€ 8.996	€ 9.813	€ 10.243	€ 12.095	€ 12.519	€ 12.949	€ 13.372	€ 14.190	€ 14.619	€ 15.119	€ 15.542	€ 17.025	€ 17.437	€ 18.237	€ 18.648	€ 19.055	€ 19.466	€ 19.873	€ 20.284	€ 22.642	€ 23.284	€ 1.040	€ 125
350 cm	€ 8.804	€ 9.343	€ 10.060	€ 10.495	€ 12.445	€ 12.875	€ 13.421	€ 13.852	€ 14.568	€ 15.001	€ 15.510	€ 16.051	€ 17.628	€ 18.048	€ 18.745	€ 19.163	€ 19.689	€ 20.107	€ 20.521	€ 20.940	€ 23.396	€ 24.042	€ 1.116	€ 144
400 cm	€ 9.035	€ 9.688	€ 10.306	€ 10.747	€ 12.794	€ 13.229	€ 13.893	€ 14.329	€ 14.946	€ 15.381	€ 15.900	€ 16.558	€ 18.228	€ 18.659	€ 19.253	€ 19.676	€ 20.323	€ 20.746	€ 21.170	€ 21.594	€ 24.147	€ 24.799	€ 1.192	€ 163
450 cm	€ 9.395	€ 10.085	€ 10.735	€ 11.210	€ 13.383	€ 13.853	€ 14.550	€ 15.021	€ 15.671	€ 16.142	€ 16.692	€ 17.385	€ 19.182	€ 19.641	€ 20.274	€ 20.730	€ 21.409	€ 21.865	€ 22.324	€ 22.783	€ 25.459	€ 26.147	€ 1.269	€ 181
500 cm	€ 9.754	€ 10.484	€ 11.165	€ 11.672	€ 13.972	€ 14.478	€ 15.207	€ 15.713	€ 16.395	€ 16.901	€ 17.483	€ 18.213	€ 20.136	€ 20.625	€ 21.295	€ 21.784	€ 22.495	€ 22.983	€ 23.478	€ 23.972	€ 26.772	€ 27.495	€ 1.345	€ 200
550 cm	€ 10.103	€ 10.730	€ 11.418	€ 12.042	€ 14.442	€ 14.953	€ 15.580	€ 16.204	€ 16.894	€ 17.407	€ 17.998	€ 18.733	€ 20.756	€ 21.253	€ 22.036	€ 22.536	€ 23.145	€ 23.641	€ 24.250	€ 24.751	€ 27.651	€ 28.274	€ 1.421	€ 219
600 cm	€ 10.455	€ 10.978	€ 11.672	€ 12.414	€ 14.913	€ 15.431	€ 15.955	€ 16.695	€ 17.395	€ 17.914	€ 18.513	€ 19.255	€ 21.378	€ 21.884	€ 22.778	€ 23.290	€ 23.795	€ 24.302	€ 25.025	€ 25.531	€ 28.531	€ 29.054	€ 1.497	€ 238
650 cm	€ 10.697	€ 11.226	€ 11.929	€ 12.676	€ 15.276	€ 15.802	€ 16.335	€ 17.081	€ 17.787	€ 18.314	€ 18.920	€ 19.667	€ 21.893	€ 22.405	€ 23.309	€ 23.826	€ 24.340	€ 24.853	€ 25.585	€ 26.096	€ 29.200	€ 29.729	€ 1.574	€ 257
700 cm	€ 10.938	€ 11.473	€ 12.184	€ 12.937	€ 15.638	€ 16.173	€ 16.713	€ 17.467	€ 18.178	€ 18.714	€ 19.325	€ 20.079	€ 22.407	€ 22.926	€ 23.837	€ 24.360	€ 24.885	€ 25.402	€ 26.143	€ 26.661	€ 29.866	€ 30.401	€ 1.650	€ 276
750 cm	€ 11.185	€ 11.729	€ 12.447	€ 13.209	€ 16.008	€ 16.552	€ 17.099	€ 17.859	€ 18.579	€ 19.120	€ 19.741	€ 20.503	€ 22.929	€ 23.455	€ 24.376	€ 24.905	€ 25.434	€ 25.961	€ 26.709	€ 27.235	€ 30.541	€ 31.082	€ 1.726	€ 295
800 cm	€ 11.433	€ 11.986	€ 12.709	€ 13.480	€ 16.380	€ 16.932	€ 17.486	€ 18.251	€ 18.980	€ 19.527	€ 20.156	€ 20.926	€ 23.450	€ 23.986	€ 24.916	€ 25.450	€ 25.985	€ 26.521	€ 27.274	€ 27.809	€ 31.216	€ 31.762	€ 1.803	€ 313
850 cm	€ 11.678	€ 12.236	€ 12.969	€ 13.746	€ 16.749	€ 17.307	€ 17.866	€ 18.640	€ 19.375	€ 19.931	€ 20.566	€ 21.343	€ 23.972	€ 24.513	€ 25.449	€ 25.992	€ 26.534	€ 27.075	€ 27.837	€ 28.380	€ 31.887	€ 32.442	€ 1.879	€ 332
900 cm	€ 11.921	€ 12.487	€ 13.227	€ 14.010	€ 17.116	€ 17.680	€ 18.245	€ 19.027	€ 19.769	€ 20.333	€ 20.974	€ 22.939	€ 25.804	€ 26.411	€ 25.980	€ 26.534	€ 27.080	€ 27.627	€ 30.078	€ 30.692	€ 34.426	€ 35.052	€ 1.955	€ 351
950 cm	€ 12.302	€ 13.008	€ 13.784	€ 14.598	€ 17.834	€ 18.433	€ 19.143	€ 19.837	€ 20.733	€ 21.331	€ 22.007	€ 24.005	€ 26.997	€ 27.750	€ 27.242	€ 27.827	€ 28.522	€ 29.101	€ 31.584	€ 32.231	€ 36.097	€ 36.864	€ 2.040	€ 369
1000 cm	€ 12.681	€ 13.529	€ 14.339	€ 15.187	€ 18.552	€ 19.187	€ 20.039	€ 20.645	€ 21.699	€ 22.329	€ 23.039	€ 25.070	€ 28.192	€ 29.089	€ 28.504	€ 29.122	€ 29.964	€ 30.575	€ 33.090	€ 33.769	€ 37.768	€ 38.676	€ 2.126	€ 388
1050 cm	€ 12.938	€ 13.794	€ 14.612	€ 15.468	€ 18.933	€ 19.574	€ 20.436	€ 21.062	€ 22.109	€ 22.748	€ 23.465	€ 25.504	€ 28.726	€ 29.629	€ 29.142	€ 29.680	€ 30.527	€ 31.148	€ 33.668	€ 34.357	€ 38.455	€ 39.372	€ 2.210	€ 405
1100 cm	€ 13.198	€ 14.063	€ 14.887	€ 15.751	€ 19.316	€ 19.963	€ 20.833	€ 21.481	€ 22.522	€ 24.229	€ 25.013	€ 25.940	€ 29.262	€ 30.170	€ 31.214	€ 31.735	€ 32.649	€ 33.340	€ 34.249	€ 34.946	€ 39.144	€ 40.070	€ 2.295	€ 424
1150 cm	€ 13.451	€ 14.321	€ 15.155	€ 16.025	€ 19.695	€ 20.348	€ 21.225	€ 21.878	€ 22.928	€ 24.641	€ 25.434	€ 26.369	€ 29.792	€ 30.712	€ 31.673	€ 32.288	€ 33.208	€ 33.905	€ 34.826	€ 35.527	€ 39.830	€ 40.761	€ 2.381	€ 443
1200 cm	€ 13.704	€ 14.580	€ 15.421	€ 16.297	€ 20.074	€ 20.733	€ 21.616	€ 22.274	€ 23.332	€ 25.052	€ 25.854	€ 26.799	€ 30.320	€ 31.253	€ 32.131	€ 32.840	€ 33.766	€ 34.469	€ 35.400	€ 36.109	€ 40.514	€ 41.452	€ 2.466	€ 462
1250 cm	€ 13.957	€ 14.842	€ 15.689	€ 16.575	€ 20.453	€ 21.118	€ 22.009	€ 22.677	€ 23.741	€ 25.467	€ 26.276	€ 27.226	€ 30.853	€ 31.791	€ 32.678	€ 33.393	€ 34.328	€ 35.036	€ 35.975	€ 36.692	€ 41.196	€ 42.143	€ 2.550	€ 481
1300 cm	€ 14.209	€ 15.104	€ 15.957	€ 16.851	€ 20.833	€ 22.318	€ 23.280	€ 24.018	€ 25.831	€ 26.603	€ 27.459	€ 28.455	€ 31.386	€ 32.330	€ 34.153	€ 34.914	€ 35.899	€ 36.655	€ 37.640	€ 38.406	€ 43.052	€ 44.049	€ 2.635	€ 500
1350 cm	€ 14.466	€ 15.366	€ 16.228	€ 17.128	€ 21.213	€ 22.707	€ 23.672	€ 24.418	€ 26.236	€ 27.022	€ 27.882	€ 28.885	€ 31.919	€ 32.868	€ 34.697	€ 35.467	€ 36.458	€ 37.226	€ 38.217	€ 38.989	€ 43.741		€ 2.721	€ 519
1400 cm	€ 14.721	€ 15.627	€ 16.497	€ 17.403	€ 21.592	€ 23.094	€ 24.660	€ 25.456	€ 26.641	€ 27.438	€ 28.306	€ 29.313	€ 33.294	€ 34.291	€ 35.241	€ 36.019	€ 37.016	€ 37.796	€ 38.791	€ 39.571	€ 44.428		€ 2.805	€ 538
1450 cm	€ 14.976	€ 15.888	€ 16.767	€ 17.679	€ 21.971	€ 23.482	€ 25.050	€ 25.856	€ 27.047	€ 27.854	€ 28.729	€ 29.741	€ 33.824	€ 34.827	€ 35.784	€ 36.571	€ 37.574	€ 38.366	€ 39.366	€ 40.153			€ 2.890	€ 556
1500 cm	€ 15.231	€ 16.149	€ 17.036	€ 17.954	€ 22.840	€ 24.413	€ 25.440	€ 26.255	€ 27.452	€ 28.270	€ 29.152	€ 30.169	€ 34.355	€ 35.364	€ 36.328	€ 37.123	€ 38.132	€ 38.936	€ 39.941	€ 40.735			€ 2.976	€ 575

FS3	€ 298	€ 312	€ 341	€ 374	€ 405	€ 436	€ 467	€ 498	€ 529	€ 560	€ 720	€ 751	€ 782	€ 813	€ 847	€ 878	€ 908	€ 939	€ 970	€ 1.001	€ 1.032	€ 1.063
FS5-A	€ 55	€ 69	€ 81	€ 93	€ 107	€ 119	€ 134	€ 145	€ 160	€ 172	€ 186	€ 198	€ 212	€ 224	€ 238	€ 250	€ 265	€ 277	€ 291	€ 303	€ 317	€ 329
FS5-E	€ 76	€ 95	€ 112	€ 128	€ 148	€ 164	€ 184	€ 200	€ 220	€ 236	€ 256	€ 273	€ 292	€ 309	€ 328	€ 345	€ 364	€ 381	€ 401	€ 417	€ 437	€ 453

FS3	Gutter System (for both direction)
FS5-A	Additional Fabric Support Profile (Standard) (for both direction)
FS5-E	Additional Fabric Support Profile (3 Axis) (for both direction)
FS4	Additional Rail for PLUS Series - Al. - 120x150mm (for both direction)
FS8	Lighting System
FS9-S*	Price difference for Side Beam for PLUS Series - Al. - 100x150mm (Special)

FS8		LED TYPE & MODULE		
		2 LED	3 LED	4 LED
FS8-S	SPOT	€ 125	€ 152	€ 179
FS8-L	LINEAR	€ 179	€ 233	-
FS8-E	3 AXIS	€ 206	€ 268	-

Note: 50x150mm Al. Side beam is included in the price. For other option which is 100x150mm Al. Special side beam is extra cost.

* If the projection bigger than 700cm has to add Side Beam Pillar until to rail (FS15 or FS15-B)
* FS9 Side Beam (Al. 50x150mm) is included in the price. For other option which is 100x150mm Al. Special side beam is extra cost.
* FS Flexy Plain/3D or Stam 6002 is included in the price
* Motor and Remote control is included in the price
* RAL Colours specified in Aluminium coating catalogue are included in price. Any other RAL colours which are existing in our Supplier's stock can be applied without extra cost.
* Standard colours are RAL9010, RAL7040, RAL1013, RAL7046, RAL9004, RAL3022, RAL120-2, RAL7036, RAL8019, RAL120-5, RAL8025, RAL4001, RAL620-3, RAL5008
* Painting cost has to be min. 125€
* Plastic parts coloured only specified colours

OPTIONS

FS10	Extra pillar (100x100mm Al.)	€ 335	pcs
FS10-ST3	Extra pillar (100x100x3mm St.)	€ 401	pcs
FS10-ST5	Extra pillar (100x100x5mm St.)	€ 623	pcs
FS11	Deco ceiling cover	€ 46	m^2
FS12	Izo-Pro ceiling cover (up to 800 cm width)	€ 39	m^2
FS15	Side beam pillar (50x100mm - Al)	€ 174	pcs
FS15-B	Side beam pillar (100x100mm - Al)	€ 335	pcs
FS16	Wood effect (*Price difference for standart patterns (up to 700cm projection) (*Can not be applied to steel construction or freestanding products with base plate.)	10% of product price	
FS19	Fix louver	€ 46	lm
FS23	External Square Downpipe	€ 205	pcs
FS24	W96 Ceiling Cover	€ 53	m^2
FS25	Fabric support profile special color	€ 11	m^2
FS26	Exclusive fabric difference	€ 31	m^2
FS27	3 Axis lighting fabric support profile difference	€ 9	m^2
FS29-1	Sun Sensor (SUNIS) (with Universal Receiver, it's included in the price)	€ 596	pcs
FS29-2	Wind Sensor (EOLIS RTS) (with Universal Receiver, it's included in the price)	€ 367	pcs
FS29-3	Sun and Wind Sensor (SOLIRIS) (with Universal Receiver, it's included in the price)	€ 459	pcs
FS30	CONNEXOON	€246	pcs
FS31-1	Remote Control - PURE - Telis 1	€55	pcs
FS31-4	Remote Control - PURE - Telis 4	€93	pcs
FS31-16	Remote Control - PURE - Telis 16	€264	pcs
FS32-1	Remote Control - PATIO - Telis 1	€76	pcs
FS32-4	Remote Control - PATIO - Telis 4	€123	pcs
FS33-1	Remote Control - LOUNGE - Telis 1	€93	pcs
FS33-4	Remote Control - LOUNGE - Telis 4	€133	pcs
FS34-1	Remote Control - MODULIS PURE - Telis 1	€125	pcs
FS34-4	Remote Control - MODULIS PURE - Telis 4	€192	pcs
FS35-1	Remote Control - MODULIS LOUNGE - Telis 1	€144	pcs
FS35-4	Remote Control - MODULIS LOUNGE - Telis 4	€220	pcs

*** Can't apply a sensor to the single motor product. For further information please contact with PALMIYE**

BACK PILLAR POSITION CHANGE

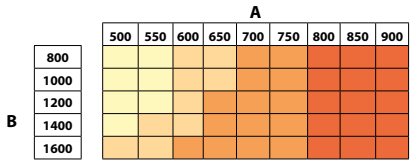

BACK PILLAR : Al. 100x100x3mm
BACK BEAM : Al. 100x150x3mm

BACK PILLAR : St. 100x100x3mm
BACK BEAM : St. 100x150x3mm

BACK PILLAR : St. 100x100x5mm
BACK BEAM : St. 100x150x5mm

BACK PILLAR : St. 100x100x5mm
BACK BEAM : Al. 100x200x5mm

(construction price difference needs to be added)

FRONT PILLAR POSITION CHANGE

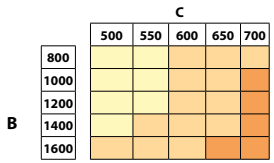

FRONT PILLAR : Al. 100x100x3mm
FRONT BEAM : Al. 100x150x3mm

FRONT PILLAR : St. 100x100x3mm
FRONT BEAM : St. 100x150x3mm

FRONT PILLAR : St. 100x100x5mm
FRONT BEAM : St. 100x150x5mm

(construction price difference needs to be added)

STANDARD CONSTRUCTION

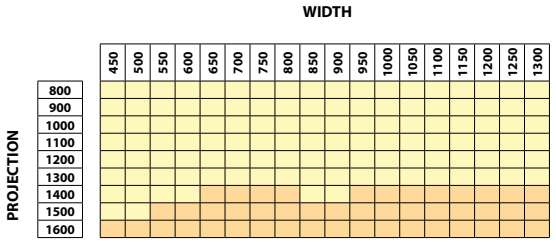

FRONT & BACK PILLAR : Al. 100x100x3mm
FRONT & BACK BEAM : Al. 100X150X3mm

FRONT & BACK PILLAR : St. 100x100x3mm
FRONT & BACK BEAM : St. 100x150x3mm

(in price included)

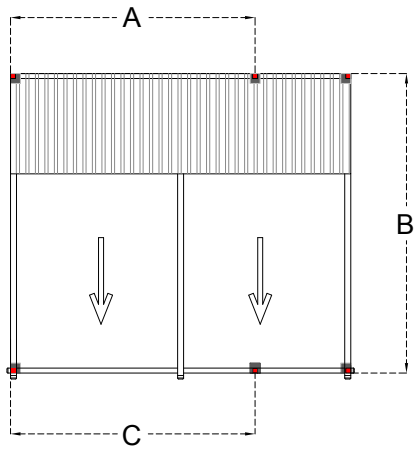

EXTENSIONS

Rail	PLUS - 120x150mm	€ 209	lm
Beam	Al. 100x150mm	€ 96	lm
Beam	St. 100x150x3mm	€ 190	lm
Beam	St. 100x150x5mm	€ 246	lm
Beam	St. 100x200x3mm	€ 193	lm
Beam	St. 100x200x5mm	€ 293	lm
Fabric protection cover	Al. - 63x___cm	€ 37	m^2
Gutter	Special Profile	€ 28	lm
Pillar	Al. 100x100mm	€ 107	lm
Pillar	St. 100x100x3mm	€ 129	lm
Pillar	St. 100x100x5mm	€ 246	lm
Pillar	St. 150x150x3mm	€ 261	lm
Pillar	St. 150x150x5mm	€ 390	lm

Max. Al. front pillar height is 280 cm
Max. St 3mm front pillar height is 380 cm
Max. St 5mm front pillar height is 480 cm

PRICE DIFFERENCE

BEAM GROUP

Beam	**Standard**	**Al. 100x150mm**		
	to	St. 100x150x3mm	€ 95	lm
		St. 100x150x5mm	€ 151	lm
		St. 100x200x3mm	€ 98	lm
		St. 100x200x5mm	€ 197	lm

PILLAR GROUP

Pillar	**Standard**	**Al. 100x100mm**		
	to	St. 100x100x3mm	€ 66	pcs
		St. 100x100x5mm	€ 289	pcs
		St. 150x150x3mm	€ 414	pcs
		St. 150x150x5mm	€ 781	pcs

CROWN

COMPACT

Single Motor

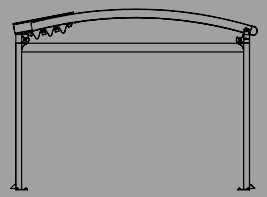

MAXIMUM DIMENSIONS

	WIDTH	PROJECTION
2 RAILS	350 cm	600 cm
3 RAILS	700 cm	600 cm
4 RAILS	1050 cm	600 cm
5 RAILS	1100 cm	600 cm
	1300 cm	500 cm

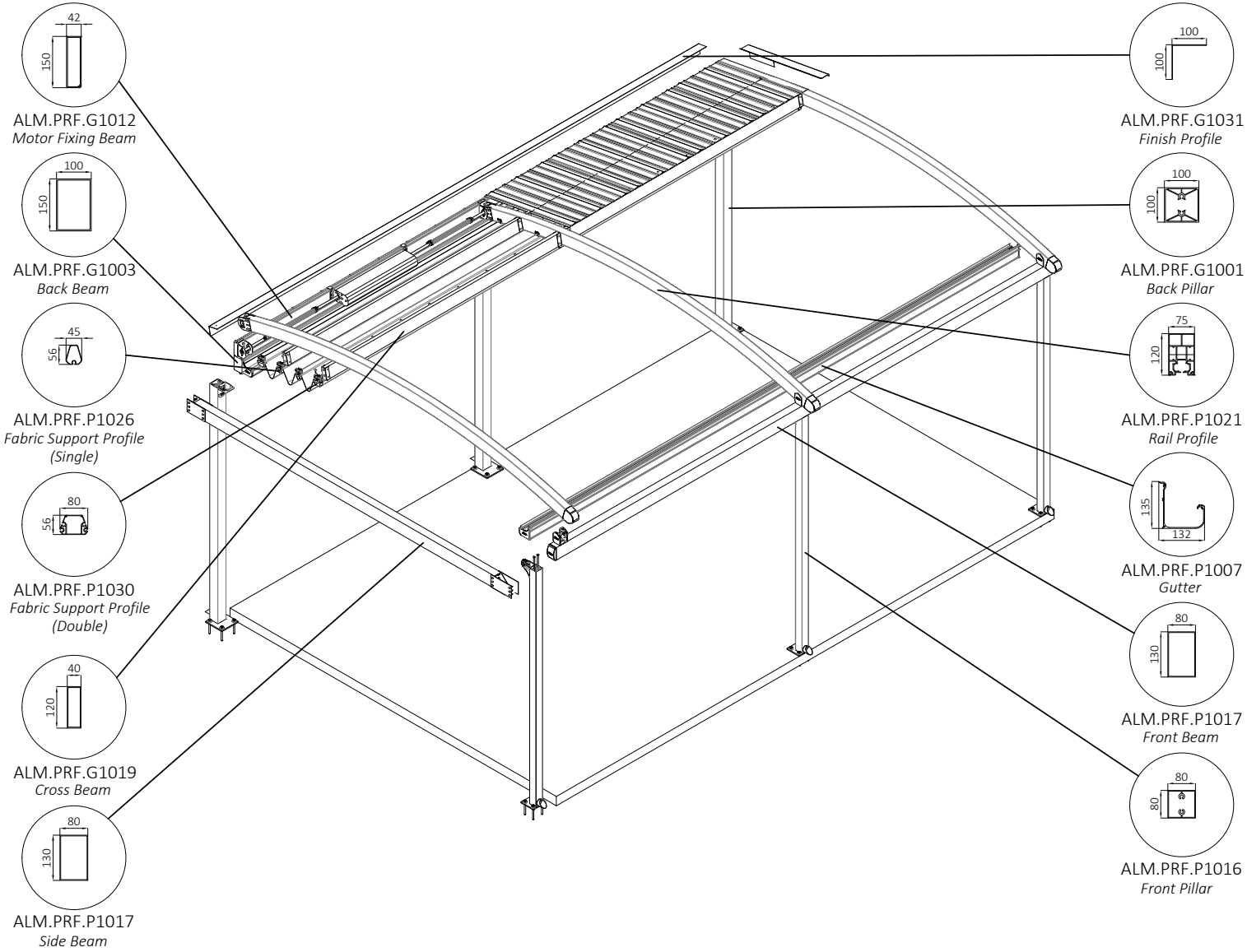

TECHNICAL FEATURES

COLLECTED FABRIC DIMENSIONS

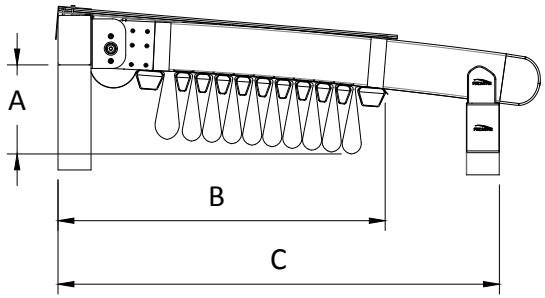

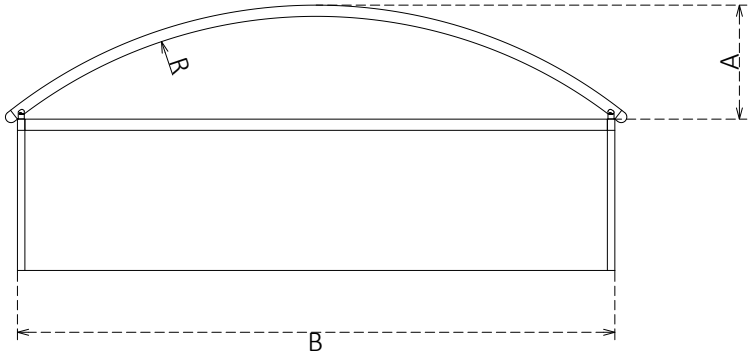

Projection cm

No of Fabric Support Profiles	200	250	300	350	400	450	500	550	600	C
7	28									84
7		29								91
9			31							104
11				32						110
13					33					123
13						34				130
15							36			143
17								37		149
19									39	162
				A						B

*Calculated according to a slope of 15%

DRAINAGE CALCULATION

Type	Max. m²
COMPACT	30 m²/pc

* per drainage

There should be at least one drainage, each 8 m length gutter.

RADIUS CHART

RADIUS	650	850

Projection	A		
250	27		
300	33		
350	39		
400	47		B
450	56	45	
500	66	53	
550	77	61	
600		70	

*The values are approx. ± 5 cm

WIND RESISTANCE

WIDTH (cm)

	450	500	550	600	650	700	750	800	850	900	950	1000	1050	1100	1150	1200	1250	1300
400	11	11	11	10	10	9	11	11	10	10	10	9	11	11	10	10	10	10
450	10	10	9	9	9	8	10	9	9	9	9	8	10	9	9	9	9	9
500	10	9	8	8	8	7	9	8	8	8	8	7	9	8	8	8	8	8
550	9	8	7	7	7	7	8	7	7	7	7	7	8	7	7	7	7	
600	8	8	7	7	7	6	8	7	7	7	7	6	8	7	7	7		

All sides open

WIDTH (cm)

PROJECTION (cm)	450	500	550	600	650	700	750	800	850	900	950	1000	1050	1100	1150	1200	1250	1300
400	8	8	8	8	8	8	8	8	8	8	8	8	8	8	8	8	8	8
450	8	8	8	8	8	7	8	8	8	8	8	7	8	8	8	8	8	8
500	8	8	8	7	7	7	8	8	7	7	7	7	8	8	7	7	7	7
550	7	7	7	7	7	6	7	7	7	7	7	6	7	7	7	7	7	
600	7	7	7	7	7	6	7	7	7	7	7	6	7	7	7	7		

With side enclosure

*The values are given according to the Beaufort scale.

**Calculated for Products with a front height of 250 cm according to Eurocode EN 1991-1-4 Terrain Category 4.

*** You can ask for new calculations for special designs.

CROWN COMPACT Single Motor

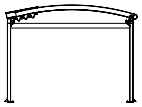

Width

	2 RAILS			3 RAILS							4 RAILS							5 RAILS					FS4 FS10-C
	250 cm	300 cm	350 cm	400 cm	450 cm	500 cm	550 cm	600 cm	650 cm	700 cm	750 cm	800 cm	850 cm	900 cm	950 cm	1000 cm	1050 cm	1100 cm	1150 cm	1200 cm	1250 cm	1300 cm	
200 cm	€ 4.501	€ 4.733	€ 5.047	€ 5.879	€ 6.193	€ 6.429	€ 6.647	€ 6.864	€ 7.255	€ 7.443	€ 8.197	€ 8.424	€ 8.733	€ 8.965	€ 9.350	€ 9.563	€ 9.777	€ 10.382	€ 10.547	€ 10.675	€ 11.942	€ 12.295	852 €
250 cm	€ 4.687	€ 5.034	€ 5.339	€ 6.103	€ 6.424	€ 6.709	€ 7.039	€ 7.262	€ 7.557	€ 7.750	€ 8.531	€ 8.878	€ 9.312	€ 9.436	€ 9.753	€ 9.973	€ 10.299	€ 10.923	€ 11.093	€ 11.223	€ 12.545	€ 12.904	915 €
300 cm	€ 5.015	€ 5.400	€ 5.741	€ 6.579	€ 6.948	€ 7.280	€ 7.645	€ 7.903	€ 8.234	€ 8.459	€ 9.328	€ 9.713	€ 10.195	€ 10.360	€ 10.705	€ 10.962	€ 11.323	€ 12.016	€ 12.216	€ 12.372	€ 13.833	€ 14.230	978 €
350 cm	€ 5.315	€ 5.598	€ 5.947	€ 6.923	€ 7.304	€ 7.671	€ 7.940	€ 8.310	€ 8.647	€ 8.876	€ 9.781	€ 10.175	€ 10.673	€ 10.838	€ 11.326	€ 11.590	€ 11.853	€ 12.569	€ 12.878	€ 13.035	€ 14.561	€ 14.851	1.041 €
400 cm	€ 5.506	€ 5.797	€ 6.152	€ 7.151	€ 7.543	€ 7.960	€ 8.235	€ 8.612	€ 8.954	€ 9.190	€ 10.123	€ 10.523	€ 11.027	€ 11.205	€ 11.740	€ 12.010	€ 12.280	€ 13.015	€ 13.328	€ 13.488	€ 15.059	€ 15.356	1.103 €
450 cm	€ 5.703	€ 6.001	€ 6.362	€ 7.386	€ 7.788	€ 8.255	€ 8.538	€ 8.922	€ 9.270	€ 9.511	€ 10.473	€ 10.879	€ 11.394	€ 11.578	€ 12.162	€ 12.439	€ 12.714	€ 13.471	€ 13.787	€ 13.948	€ 15.567	€ 15.871	1.167 €
500 cm	€ 5.895	€ 6.199	€ 6.568	€ 7.615	€ 8.027	€ 8.546	€ 8.832	€ 9.223	€ 9.580	€ 9.825	€ 10.816	€ 11.229	€ 11.757	€ 11.945	€ 12.577	€ 12.860	€ 13.142	€ 13.917	€ 14.238	€ 14.404	€ 16.068	€ 16.379	1.230 €
550 cm	€ 6.232	€ 6.680	€ 7.086	€ 8.215	€ 8.675	€ 9.227	€ 9.654	€ 9.976	€ 10.473	€ 10.751	€ 11.841	€ 12.295	€ 12.870	€ 13.211	€ 13.728	€ 14.060	€ 14.482	€ 15.336	€ 15.684	€ 15.871			1.293 €
600 cm	€ 6.427	€ 6.882	€ 7.297	€ 8.447	€ 8.918	€ 9.520	€ 9.955	€ 10.284	€ 10.785	€ 11.068	€ 12.190	€ 12.647	€ 13.235	€ 13.583	€ 14.163	€ 14.486	€ 14.915	€ 15.788					1.356 €
FS3	€ 298	€ 312	€ 341	€ 374	€ 405	€ 436	€ 467	€ 498	€ 529	€ 560	€ 720	€ 751	€ 782	€ 813	€ 847	€ 878	€ 908	€ 939	€ 970	€ 1.001	€ 1.032	€ 1.063	
FS5-A	€ 27	€ 35	€ 41	€ 46	€ 54	€ 60	€ 67	€ 73	€ 80	€ 86	€ 93	€ 99	€ 106	€ 112	€ 119	€ 125	€ 132	€ 138	€ 145	€ 151	€ 159	€ 165	
FS5-E	€ 38	€ 48	€ 56	€ 64	€ 74	€ 82	€ 92	€ 100	€ 110	€ 118	€ 128	€ 136	€ 146	€ 154	€ 164	€ 172	€ 182	€ 190	€ 200	€ 209	€ 218	€ 227	

Note: If you use an additional rail you have to add a front pillar. It's included in the price.

FS3	Gutter System (for both direction)
FS5-A	Additional Fabric Support Profile (Standard) (for both direction)
FS5-E	Additional Fabric Support Profile (3 Axis) (for both direction)
FS4 FS10-C	Additional Rail for COMPACT Series - Al. - 75x120mm (for both direction) Additional Pillar for COMPACT Series - Al. - 80x80mm (for both direction)
FS8	Lighting System

FS8		LED TYPE & MODULE		
		2 LED	3 LED	4 LED
FS8-S	SPOT	€ 125	€ 152	€ 179
FS8-L	LINEAR	€ 179	€ 233	-
FS8-E	3 AXIS	€ 206	€ 268	-

* FS9 Side Beam (Al. 80x130mm) is included in the price
* FS Flexy Plain/3D or Stam 6002 is included in the price
* Motor and Remote control is included in the price
* RAL Colours specified in Aluminium coating catalogue are included in price. Any other RAL colours which are existing in our Supplier's stock can be applied without extra cost.
* Standard colours are RAL9010, RAL7040, RAL1013, RAL7046, RAL9004, RAL3022, RAL120-2, RAL7036, RAL8019, RAL120-5, RAL8025, RAL4001, RAL620-3, RAL5008
* Painting cost has to be min. 125€
* Plastic parts coloured only specified colours

DEDUCTIONS

Price deduction can apply only front pillars, back pillars and side beam. The price of the front pillar, back pillar and side beam can be deducted from options price.

OPTIONS

FS10-C	Extra pillar (80x80mm Al.)	€ 246	pcs
FS10	Extra pillar (100x100mm Al.)	€ 335	pcs
FS10-ST3	Extra pillar (100x100x3mm St.)	€ 401	pcs
FS10-ST5	Extra pillar (100x100x5mm St.)	€ 623	pcs
FS11	Deco ceiling cover	€ 46	m^2
FS12	Izo-Pro ceiling cover (up to 800 cm width)	€ 39	m^2
FS15-C	Side beam pillar (80x80mm - Al)	€ 246	pcs
FS16	Wood effect (*Price difference for standart patterns (up to 700cm projection) (*Can not be applied to steel construction or freestanding products with base plate.)	10% of product price	
FS19	Fix louver	€ 46	lm
FS24	W96 Ceiling Cover	€ 53	m^2
FS25	Fabric support profile special color	€ 11	m^2
FS26	Exclusive fabric difference	€ 31	m^2
FS27	3 Axis lighting fabric support profile difference	€ 9	m^2
FS29-1	Sun Sensor (SUNIS) (with Universal Receiver, it's included in the price)	€ 596	pcs
FS29-2	Wind Sensor (EOLIS RTS) (with Universal Receiver, it's included in the price)	€ 367	pcs
FS29-3	Sun and Wind Sensor (SOLIRIS) (with Universal Receiver, it's included in the price)	€ 459	pcs
FS30	CONNEXOON	€246	pcs
FS31-1	Remote Control - PURE - Telis 1	€55	pcs
FS31-4	Remote Control - PURE - Telis 4	€93	pcs
FS31-16	Remote Control - PURE - Telis 16	€264	pcs
FS32-1	Remote Control - PATIO - Telis 1	€76	pcs
FS32-4	Remote Control - PATIO - Telis 4	€123	pcs
FS33-1	Remote Control - LOUNGE - Telis 1	€93	pcs
FS33-4	Remote Control - LOUNGE - Telis 4	€133	pcs
FS34-1	Remote Control - MODULIS PURE - Telis 1	€125	pcs
FS34-4	Remote Control - MODULIS PURE - Telis 4	€192	pcs
FS35-1	Remote Control - MODULIS LOUNGE - Telis 1	€144	pcs
FS35-4	Remote Control - MODULIS LOUNGE - Telis 4	€220	pcs

*** Can't apply a sensor to the single motor product. For further information please contact with PALMIYE**

BACK PILLAR POSITION CHANGE

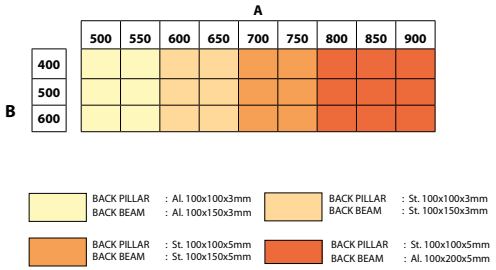

(construction price difference needs to be added)

STANDARD CONSTRUCTION

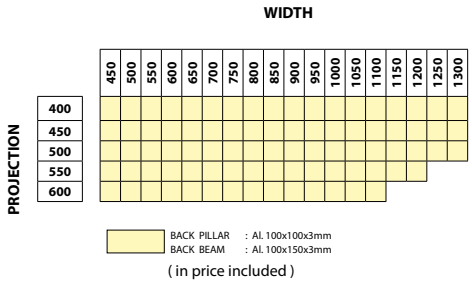

(in price included)

EXTENSIONS

Rail	COMPACT - 75x120mm	€ 128	lm
Beam	Al. 40x120mm	€ 42	lm
Beam	Al. 42x150mm	€ 65	lm
Beam	Al. 50x150mm	€ 115	lm
Beam	Al. 80x130mm	€ 61	lm
Beam	Al. 100x150mm	€ 96	lm
Beam	St. 100x150x3mm	€ 190	lm
Beam	St. 100x150x5mm	€ 246	lm
Beam	St. 100x200x3mm	€ 193	lm
Beam	St. 100x200x5mm	€ 293	lm
Fabric protection cover	Al. - 63x___cm	€ 37	m^2
Gutter	Special Profile	€ 28	lm
Pillar	Al. 80x80mm	€ 56	lm
Pillar	Al. 100x100mm	€ 107	lm
Pillar	St. 100x100x3mm	€ 129	lm
Pillar	St. 100x100x5mm	€ 246	lm
Pillar	St. 150x150x3mm	€ 261	lm
Pillar	St. 150x150x5mm	€ 390	lm

"* Max. Al. front pillar height is 280cm
* Max. St 3mm front pillar height is 380cm
* Max. St 5mm front pillar height is 480cm"

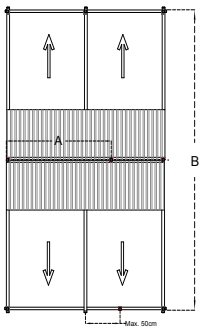

PRICE DIFFERENCE

BEAM GROUP

	Standard	Al. 100x150mm		
Back Beam	to	St. 100x150x3mm	€ 95	lm
		St. 100x150x5mm	€ 151	lm
		St. 100x200x3mm	€ 98	lm
		St. 100x200x5mm	€ 197	lm

	Standard	Al. 80x130mm		
Front Beam	to	Al. 100x150mm	€ 35	lm
		St. 100x150x3mm	€ 130	lm
		St. 100x150x5mm	€ 186	lm
		St. 100x200x3mm	€ 133	lm
		St. 100x150x5mm	€ 233	lm

PILLAR GROUP

	Standard	Al. 100x100mm		
Back Pillar	to	St. 100x100x3mm	€ 66	pcs
		St. 100x100x5mm	€ 289	pcs
		St. 150x150x3mm	€ 414	pcs
		St. 150x150x5mm	€ 781	pcs

	Standard	Al. 80x80mm		
Front Pillar	to	Al. 100x100mm	€ 88	pcs
		St. 100x100x3mm	€ 155	pcs
		St. 100x100x5mm	€ 377	pcs
		St. 150x150x3mm	€ 502	pcs
		St. 150x150x5mm	€ 870	pcs

CROWN
COMPACT
Twin

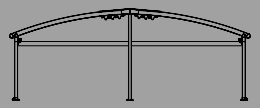

MAXIMUM DIMENSIONS

	WIDTH	PROJECTION
2 RAILS	400 cm	1200 cm
3 RAILS	800 cm	1200 cm
4 RAILS	1200 cm	1200 cm
5 RAILS	1300 cm	1200 cm

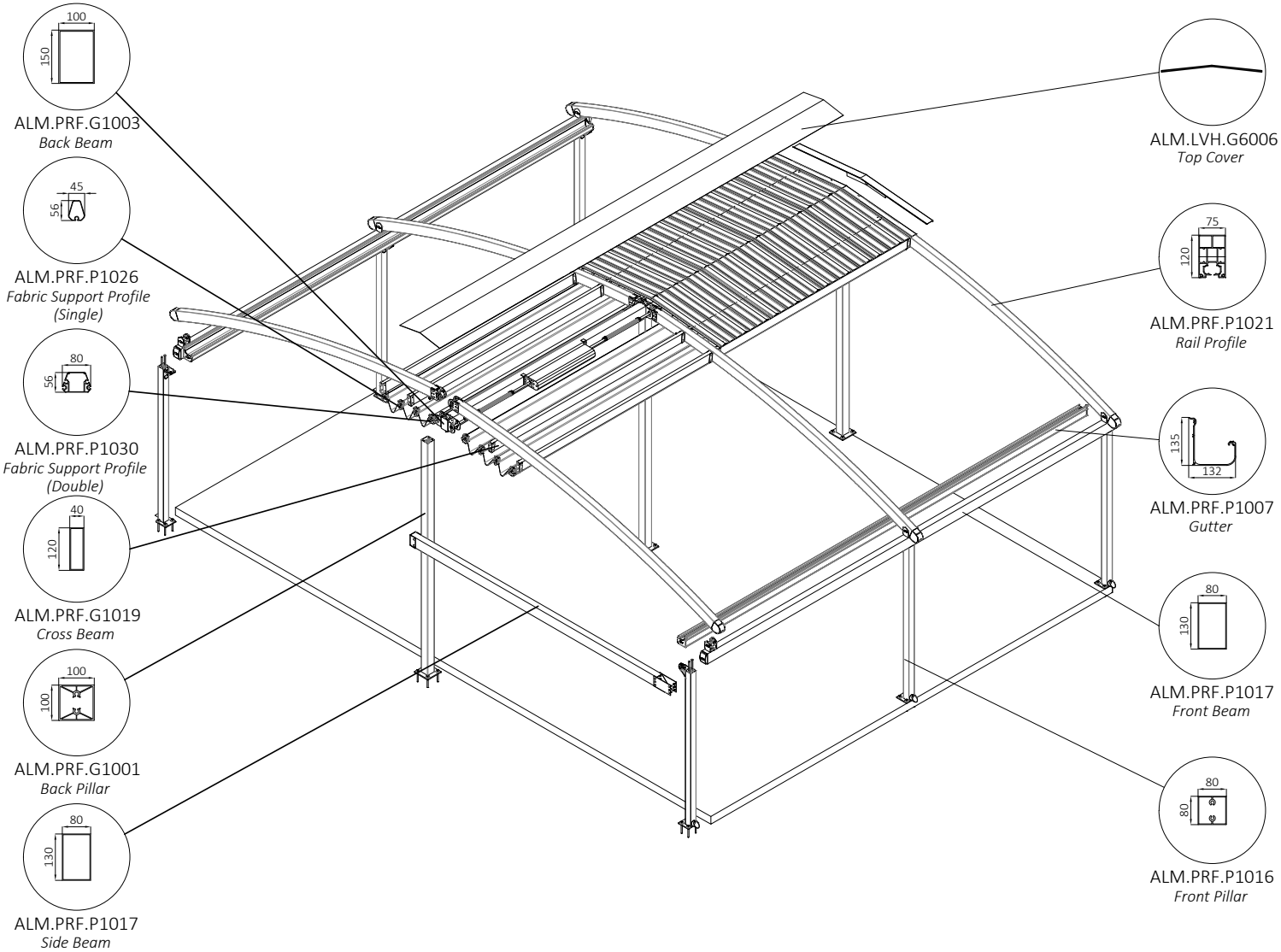

TECHNICAL FEATURES

COLLECTED FABRIC DIMENSIONS

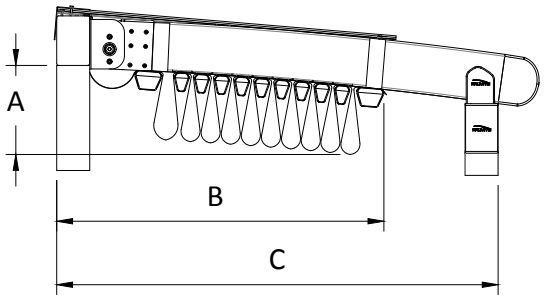

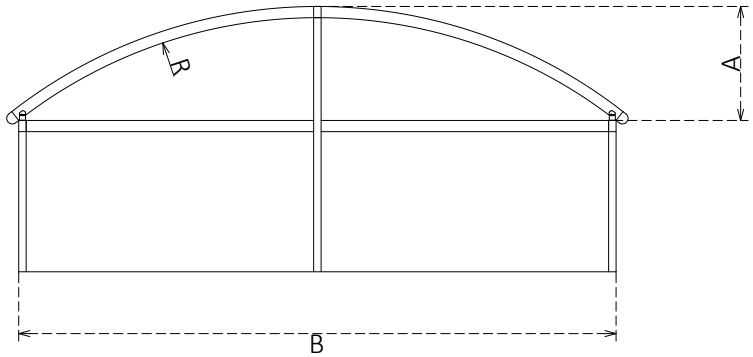

Projection cm

No of Fabric Support Profiles	200	250	300	350	400	450	500	550	600	C
5	30									68
6		31								74
7			32							81
9				34						94
10					35					100
11						36				107
13							38			120
14								39		126
15									40	133
	A									B

*Calculated according to a slope of 15%

RADIUS CHART

RADIUS	650	850	1500	2850

Projection	A				B
250	34				
300	41				
350	49				
400	58				
450	68	56			
500	81	65			
550	94	74			
600		85			
650		96			
700		109			
750		122	75		
800		137	83		
850		153	91		
900			100		
950			109		
1000			118		
1050			128		
1100			139		
1150			150	89	
1200			161	94	

*The values are approx. ± 5 cm

WIND RESISTANCE

WIDTH (cm)

PROJECTION (cm)	450	500	550	600	650	700	750	800	850	900	950	1000	1050	1100	1150	1200	1250	1300
800	11	11	11	10	10	9	8	8	11	10	10	10	9	9	8	8	10	10
900	11	10	10	9	9	8	7	7	10	9	9	9	8	8	7	7	9	9
1000	10	9	9	8	8	7	7	7	9	8	8	8	7	7	7	7	8	8
1100	10	9	8	8	8	6	6	6	9	8	8	8	6	6	6	6	8	8
1200	9	8	8	7	7	6	6	6	8	7	7	7	6	6	6	6	7	7

All sides open

WIDTH (cm)

PROJECTION (cm)	450	500	550	600	650	700	750	800	850	900	950	1000	1050	1100	1150	1200	1250	1300
800	10	10	10	10	9	8	8	8	10	10	9	9	8	8	8	8	9	9
900	10	10	9	9	9	8	8	7	10	9	9	9	8	8	8	7	9	9
1000	9	9	9	9	9	7	7	7	9	9	9	9	7	7	7	7	9	9
1100	9	9	9	9	8	7	7	7	9	9	8	8	7	7	7	7	8	8
1200	9	9	9	9	8	7	7	7	9	9	8	8	7	7	7	7	8	8

With side enclosure

*The values are given according to the Beaufort scale.

**Calculated for Products with a front height of 250 cm according to Eurocode EN 1991-1-4 Terrain Category 4.

DRAINAGE CALCULATION

Type	Max. m²
COMPACT	30 m²/pc

* per drainage

There should be at least one drainage, each 8 m length gutter.

CROWN COMPACT Twin

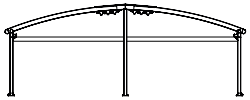

Width

	2 RAILS				3 RAILS								4 RAILS								5 RAILS		FS4 FS10-C
	250 cm	300 cm	350 cm	400 cm	450 cm	500 cm	550 cm	600 cm	650 cm	700 cm	750 cm	800 cm	850 cm	900 cm	950 cm	1000 cm	1050 cm	1100 cm	1150 cm	1200 cm	1250 cm	1300 cm	
400 cm	€ 6.946	€ 7.286	€ 7.946	€ 8.291	€ 9.788	€ 10.128	€ 10.473	€ 10.811	€ 11.470	€ 11.813	€ 12.212	€ 12.551	€ 13.744	€ 14.071	€ 14.712	€ 15.039	€ 15.362	€ 15.690	€ 16.012	€ 16.339	€ 18.233	€ 18.743	€ 1.103
450 cm	€ 7.126	€ 7.560	€ 8.138	€ 8.488	€ 10.061	€ 10.406	€ 10.844	€ 11.188	€ 11.763	€ 12.109	€ 12.516	€ 12.949	€ 14.215	€ 14.550	€ 15.107	€ 15.440	€ 15.858	€ 16.191	€ 16.519	€ 16.850	€ 18.821	€ 19.335	€ 1.167
500 cm	€ 7.306	€ 7.832	€ 8.329	€ 8.682	€ 10.333	€ 10.681	€ 11.214	€ 11.561	€ 12.056	€ 12.403	€ 12.818	€ 13.344	€ 14.686	€ 15.028	€ 15.502	€ 15.837	€ 16.353	€ 16.688	€ 17.023	€ 17.359	€ 19.405	€ 19.924	€ 1.230
550 cm	€ 7.590	€ 8.144	€ 8.667	€ 9.047	€ 10.798	€ 11.174	€ 11.733	€ 12.109	€ 12.628	€ 13.004	€ 13.443	€ 13.997	€ 15.439	€ 15.803	€ 16.308	€ 16.669	€ 17.210	€ 17.570	€ 17.934	€ 18.296	€ 20.440	€ 20.986	€ 1.293
600 cm	€ 7.871	€ 8.458	€ 9.005	€ 9.412	€ 11.262	€ 11.666	€ 12.250	€ 12.653	€ 13.198	€ 13.602	€ 14.066	€ 14.648	€ 16.191	€ 16.578	€ 17.111	€ 17.499	€ 18.065	€ 18.451	€ 18.842	€ 19.232	€ 21.473	€ 22.045	€ 1.356
650 cm	€ 8.145	€ 8.649	€ 9.201	€ 9.700	€ 11.629	€ 12.037	€ 12.538	€ 13.036	€ 13.587	€ 13.995	€ 14.466	€ 15.052	€ 16.673	€ 17.066	€ 17.690	€ 18.085	€ 18.568	€ 18.960	€ 19.443	€ 19.838	€ 22.156	€ 22.648	€ 1.418
700 cm	€ 8.421	€ 8.839	€ 9.395	€ 9.990	€ 11.996	€ 12.410	€ 12.826	€ 13.418	€ 13.976	€ 14.388	€ 14.865	€ 15.456	€ 17.155	€ 17.555	€ 18.267	€ 18.671	€ 19.070	€ 19.471	€ 20.044	€ 20.442	€ 22.838	€ 23.249	€ 1.481
750 cm	€ 8.607	€ 9.030	€ 9.593	€ 10.190	€ 12.277	€ 12.695	€ 13.120	€ 13.715	€ 14.277	€ 14.696	€ 15.176	€ 15.771	€ 17.551	€ 17.955	€ 18.673	€ 19.082	€ 19.487	€ 19.892	€ 20.471	€ 20.874	€ 23.349	€ 23.765	€ 1.545
800 cm	€ 8.793	€ 9.220	€ 9.787	€ 10.389	€ 12.554	€ 12.980	€ 13.409	€ 14.010	€ 14.577	€ 15.001	€ 15.486	€ 16.085	€ 17.945	€ 18.355	€ 19.077	€ 19.491	€ 19.904	€ 20.311	€ 20.897	€ 21.304	€ 23.858	€ 24.279	€ 1.608
850 cm	€ 8.981	€ 9.416	€ 9.990	€ 10.598	€ 12.839	€ 13.271	€ 13.706	€ 14.311	€ 14.883	€ 15.311	€ 15.805	€ 16.409	€ 18.345	€ 18.759	€ 19.490	€ 19.907	€ 20.323	€ 20.738	€ 21.328	€ 21.742	€ 24.373	€ 24.798	€ 1.671
900 cm	€ 9.172	€ 9.613	€ 10.190	€ 10.804	€ 13.124	€ 13.563	€ 14.002	€ 14.610	€ 15.188	€ 15.621	€ 16.120	€ 16.731	€ 18.742	€ 19.164	€ 19.901	€ 20.322	€ 20.743	€ 21.164	€ 21.757	€ 22.178	€ 24.887	€ 25.314	€ 1.733
950 cm	€ 9.359	€ 9.804	€ 10.388	€ 11.006	€ 13.407	€ 13.849	€ 14.292	€ 14.907	€ 15.490	€ 15.929	€ 16.432	€ 17.047	€ 19.140	€ 19.566	€ 20.307	€ 20.735	€ 21.159	€ 21.585	€ 22.184	€ 22.611	€ 25.396	€ 25.830	€ 1.796
1000 cm	€ 9.545	€ 9.995	€ 10.584	€ 11.207	€ 13.687	€ 14.133	€ 14.580	€ 15.201	€ 15.788	€ 16.234	€ 16.740	€ 17.359	€ 19.536	€ 19.966	€ 20.711	€ 21.145	€ 21.573	€ 22.002	€ 22.609	€ 23.042	€ 25.904	€ 26.344	€ 1.859
1050 cm	€ 9.840	€ 10.401	€ 11.018	€ 11.665	€ 14.246	€ 14.721	€ 15.282	€ 15.832	€ 16.543	€ 17.013	€ 17.546	€ 18.191	€ 20.467	€ 21.012	€ 21.694	€ 22.153	€ 22.699	€ 23.152	€ 23.784	€ 24.242	€ 27.206	€ 27.758	€ 1.923
1100 cm	€ 10.133	€ 10.807	€ 11.450	€ 12.124	€ 14.805	€ 15.307	€ 15.982	€ 16.460	€ 17.295	€ 17.791	€ 18.352	€ 19.021	€ 21.399	€ 22.057	€ 22.677	€ 23.161	€ 23.822	€ 24.302	€ 24.956	€ 25.439	€ 28.506	€ 29.169	€ 1.986
1150 cm	€ 10.329	€ 11.008	€ 11.657	€ 12.336	€ 15.094	€ 15.601	€ 16.283	€ 16.776	€ 17.605	€ 18.108	€ 18.672	€ 19.347	€ 21.802	€ 22.464	€ 23.161	€ 23.580	€ 24.246	€ 24.731	€ 25.390	€ 25.880	€ 29.022	€ 29.691	€ 2.048
1200 cm	€ 10.525	€ 11.211	€ 11.864	€ 12.548	€ 15.384	€ 15.895	€ 16.582	€ 17.092	€ 17.915	€ 18.424	€ 18.993	€ 19.675	€ 22.206	€ 22.871	€ 23.644	€ 24.001	€ 24.670	€ 25.161	€ 25.825	€ 26.321	€ 29.538	€ 30.214	€ 2.111

Note: If you use an additional rail you have to add a front pillar. It's included in the price.

FS3	€ 298	€ 312	€ 341	€ 374	€ 405	€ 436	€ 467	€ 498	€ 529	€ 560	€ 720	€ 751	€ 782	€ 813	€ 847	€ 878	€ 908	€ 939	€ 970	€ 1.001	€ 1.032	€ 1.063
FS5-A	€ 55	€ 69	€ 81	€ 93	€ 107	€ 119	€ 134	€ 145	€ 160	€ 172	€ 186	€ 198	€ 212	€ 224	€ 238	€ 250	€ 265	€ 277	€ 291	€ 303	€ 317	€ 329
FS5-E	€ 76	€ 95	€ 112	€ 128	€ 148	€ 164	€ 184	€ 200	€ 220	€ 236	€ 256	€ 273	€ 292	€ 309	€ 328	€ 345	€ 364	€ 381	€ 401	€ 417	€ 437	€ 453

FS3	Gutter System (for both direction)
FS5-A	Additional Fabric Support Profile (Standard) (for both direction)
FS5-E	Additional Fabric Support Profile (3 Axis) (for both direction)
FS4 FS10-C	Additional Rail for COMPACT Series - Al. - 75x120mm (for both direction) Additional Pillar for COMPACT Series - Al. - 80x80mm (for both direction)
FS8	Lighting System

FS8		LED TYPE & MODULE		
		2 LED	3 LED	4 LED
FS8-S	SPOT	€ 125	€ 152	€ 179
FS8-L	LINEAR	€ 179	€ 233	-
FS8-E	3 AXIS	€ 206	€ 268	-

* FS9 Side Beam (Al. 80x130mm) is included in the price
* FS Flexy Plain/3D or Stam 6002 is included in the price
* Motor and Remote control is included in the price
* RAL Colours specified in Aluminium coating catalogue are included in price. Any other RAL colours which are existing in our Supplier's stock can be applied without extra cost.
* Standard colours are RAL9010, RAL7040, RAL1013, RAL7046, RAL9004, RAL3022, RAL120-2, RAL7036, RAL8019, RAL120-5, RAL8025, RAL4001, RAL620-3, RAL5008
* Painting cost has to be min. 125€
* Plastic parts coloured only specified colours

DEDUCTIONS

Price deduction can apply only front pillars, back pillars and side beam. The price of the front pillar, back pillar and side beam can be deducted from options price.

OPTIONS

FS10-C	Extra pillar (80x80mm Al.)	€ 246	pcs
FS10	Extra pillar (100x100mm Al.)	€ 335	pcs
FS10-ST3	Extra pillar (100x100x3mm St.)	€ 401	pcs
FS10-ST5	Extra pillar (100x100x5mm St.)	€ 623	pcs
FS11	Deco ceiling cover	€ 46	m^2
FS12	Izo-Pro ceiling cover (up to 800 cm width)	€ 39	m^2
FS15-C	Side beam pillar (80x80mm - Al)	€ 246	pcs
FS16	Wood effect (*Price difference for standart patterns (up to 700cm projection) (*Can not be applied to steel construction or freestanding products with base plate.)	10% of product price	
FS19	Fix louver	€ 46	lm
FS24	W96 Ceiling Cover	€ 53	m^2
FS25	Fabric support profile special color	€ 11	m^2
FS26	Exclusive fabric difference	€ 31	m^2
FS27	3 Axis lighting fabric support profile difference	€ 9	m^2
FS29-1	Sun Sensor (SUNIS) (with Universal Receiver, it's included in the price)	€ 596	pcs
FS29-2	Wind Sensor (EOLIS RTS) (with Universal Receiver, it's included in the price)	€ 367	pcs
FS29-3	Sun and Wind Sensor (SOLIRIS) (with Universal Receiver, it's included in the price)	€ 459	pcs
FS30	CONNEXOON	€246	pcs
FS31-1	Remote Control - PURE - Telis 1	€55	pcs
FS31-4	Remote Control - PURE - Telis 4	€93	pcs
FS31-16	Remote Control - PURE - Telis 16	€264	pcs
FS32-1	Remote Control - PATIO - Telis 1	€76	pcs
FS32-4	Remote Control - PATIO - Telis 4	€123	pcs
FS33-1	Remote Control - LOUNGE - Telis 1	€93	pcs
FS33-4	Remote Control - LOUNGE - Telis 4	€133	pcs
FS34-1	Remote Control - MODULIS PURE - Telis 1	€125	pcs
FS34-4	Remote Control - MODULIS PURE - Telis 4	€192	pcs
FS35-1	Remote Control - MODULIS LOUNGE - Telis 1	€144	pcs
FS35-4	Remote Control - MODULIS LOUNGE - Telis 4	€220	pcs

*** Can't apply a sensor to the single motor product. For further information please contact with PALMIYE**

BACK PILLAR POSITION CHANGE

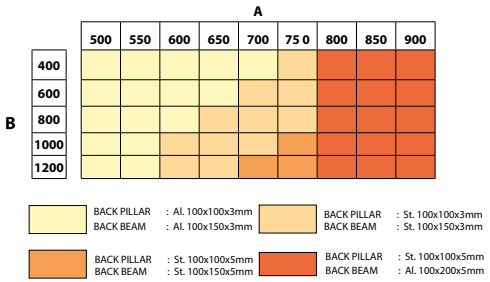

*** Price difference needs to be added.**

STANDARD CONSTRUCTION

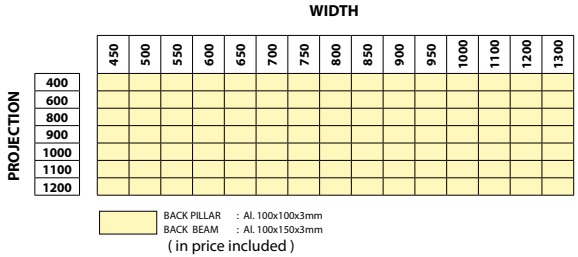

EXTENSIONS

Rail	COMPACT - 75x120mm	€ 128	lm
Beam	Al. 40x120mm	€ 42	lm
Beam	Al. 42x150mm	€ 65	lm
Beam	Al. 50x150mm	€ 115	lm
Beam	Al. 80x130mm	€ 61	lm
Beam	Al. 100x150mm	€ 96	lm
Beam	St. 100x150x3mm	€ 190	lm
Beam	St. 100x150x5mm	€ 246	lm
Beam	St. 100x200x3mm	€ 193	lm
Beam	St. 100x200x5mm	€ 293	lm
Fabric protection cover	Al. - 63x___cm	€ 37	m^2
Gutter	Special Profile	€ 28	lm
Pillar	Al. 80x80mm	€ 56	lm
Pillar	Al. 100x100mm	€ 107	lm
Pillar	St. 100x100x3mm	€ 129	lm
Pillar	St. 100x100x5mm	€ 246	lm
Pillar	St. 150x150x3mm	€ 261	lm
Pillar	St. 150x150x5mm	€ 390	lm

"* Max. Al. front pillar height is 280cm
* Max. St 3mm front pillar height is 380cm
* Max. St 5mm front pillar height is 480cm"

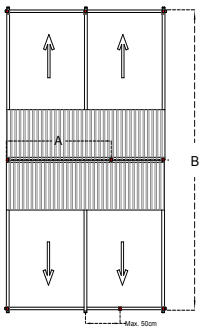

PRICE DIFFERENCE

BEAM GROUP

	Standard	Al. 100x150mm		
Back Beam	to	St. 100x150x3mm	€ 95	lm
		St. 100x150x5mm	€ 151	lm
		St. 100x200x3mm	€ 98	lm
		St. 100x200x5mm	€ 197	lm

	Standard	Al. 80x130mm		
Front Beam	to	Al. 100x150mm	€ 35	lm
		St. 100x150x3mm	€ 130	lm
		St. 100x150x5mm	€ 186	lm
		St. 100x200x3mm	€ 133	lm
		St. 100x200x5mm	*€ 233*	*lm*

PILLAR GROUP

	Standard	Al. 100x100mm		
Back Pillar	to	St. 100x100x3mm	€ 66	pcs
		St. 100x100x5mm	€ 289	pcs
		St. 150x150x3mm	€ 414	pcs
		St. 150x150x5mm	€ 781	pcs

	Standard	Al. 80x80mm		
Front Pillar	to	Al. 100x100mm	€ 88	pcs
		St. 100x100x3mm	€ 155	pcs
		St. 100x100x5mm	€ 377	pcs
		St. 150x150x3mm	€ 502	pcs
		St. 150x150x5mm	€ 870	pcs

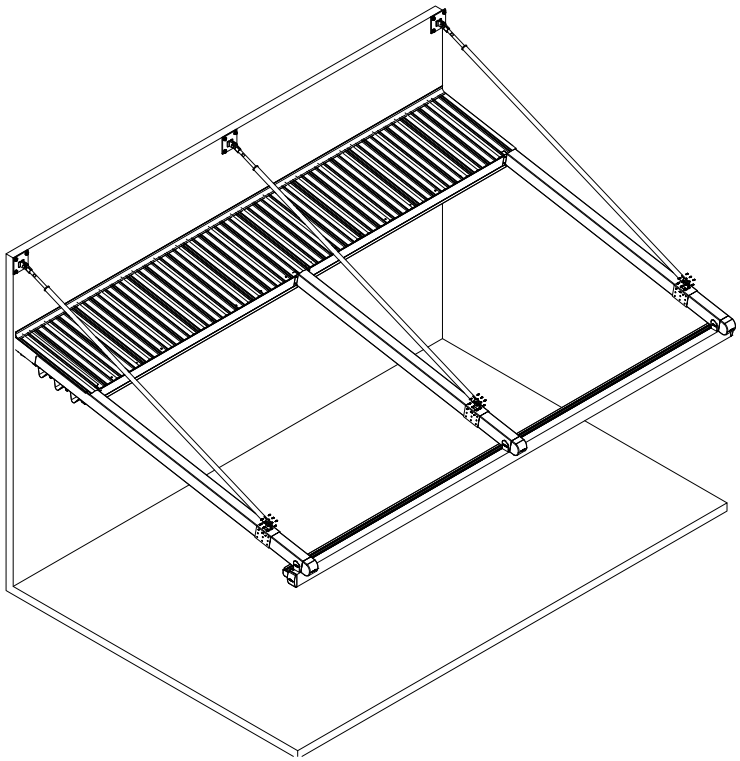

PANORAMA

I N D E X

PRODUCT FORMS

- **PANORAMA PLUS** Wall / Ceiling Installation - Suspended

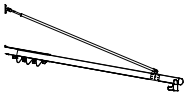

- **PANORAMA PLUS** Freestanding - Suspended

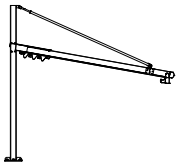

- **PANORAMA PLUS** Wall / Ceiling Installation - Buttress

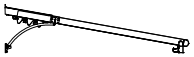

- **PANORAMA PLUS** Freestanding - Buttress

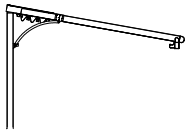

- **PANORAMA COMPACT** Wall / Ceiling Installation - Suspended

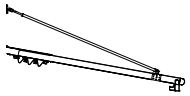

- **PANORAMA COMPACT** Freestanding - Suspended

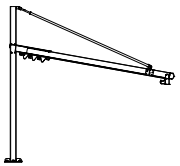

PANORAMA

PLUS
Wall / Ceiling

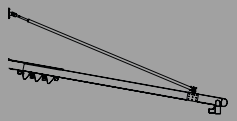

MAXIMUM DIMENSIONS

	WIDTH	PROJECTION
2 RAILS	450 cm	600 cm
3 RAILS	900 cm	600 cm
4 RAILS	1300 cm	600 cm

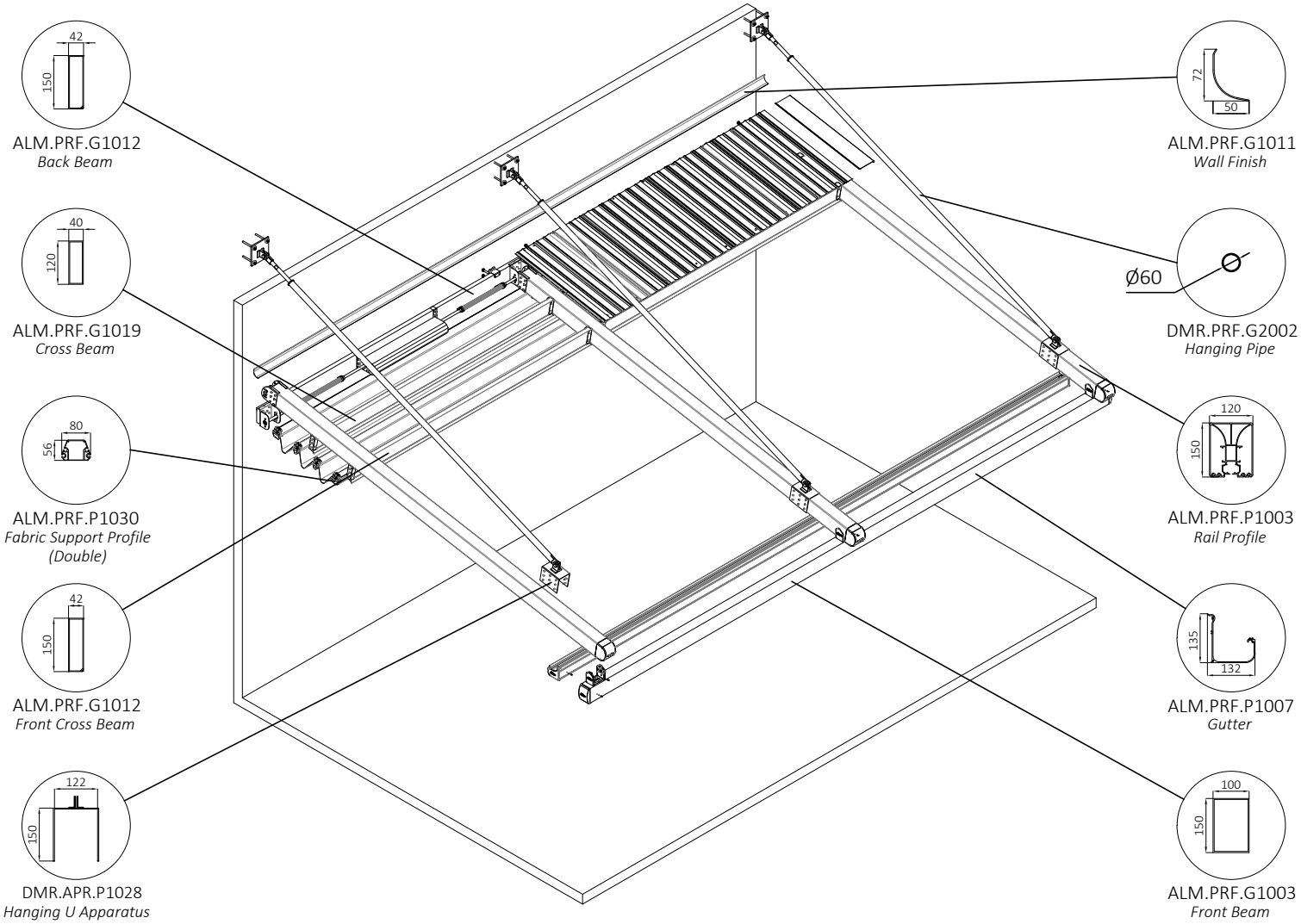

TECHNICAL FEATURES

COLLECTED FABRIC DIMENSIONS

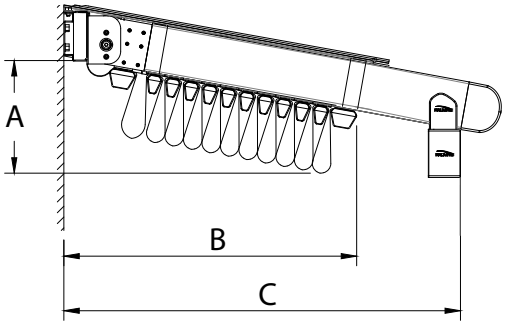

Projection cm

No of Fabric Support Profiles	185	235	284	334	383	433	482	532	581	C
4	34									61
5		35								68
6			36							74
7				37						81
8					38					87
9						39				94
10							40			100
11								41		107
12									42	113
				A						B

*Calculated according to a slope of 15%

DRAINAGE CALCULATION

Type	Max. m²
Full	39 m²/pc
Half	18 m²/pc

* per drainage

There should be at least one drainage, each 8 m length gutter.

MINIMUM SLOPE CHART

Projection	Slope										
	6,4-7,9%	7,4-8,8%	8,4-9,7%	9,4-10,8%	10,4-12%	11,2-12,7%	12-13,4%	13-14,5%	14-15,7%	15-16,6%	16-17,6%
	Rail Center										
	200	**225**	**250**	**275**	**300**	**325**	**350**	**375**	**400**	**425**	**450**
250	16	19	21	24	26	28	30	33	35	38	40
300	20	23	26	29	31	34	37	40	42	45	48
350	23	27	30	34	37	40	43	46	49	53	56
400	27	31	35	39	42	46	49	53	57	61	64
450	32	36	40	44	48	52	56	60	64	69	73
500	36	41	45	50	54	59	63	68	72	77	81
550	40	45	50	55	60	65	70	75	80	85	90
600	44	50	55	61	66	72	77	83	88	94	99

For back height of system 30 cm should be added to slope value.

*Note: Max. slope can be up to 25%

WIND RESISTANCE

WIDTH (cm)

PROJECTION (cm)	**450**	**500**	**550**	**600**	**650**	**700**	**750**	**800**	**850**	**900**	**950**	**1000**	**1050**	**1100**	**1150**	**1200**	**1250**	**1300**
400	10	10	10	9	9	9	8	8	8	7	9	9	9	8	8	8	8	7
450	10	9	8	8	8	8	7	7	7	7	8	8	8	7	7	7	7	7
500	9	8	7	7	7	7	6	6	6	6	7	7	7	6	6	6	6	6
550	8	7	7	7	7	6	6	6	6	6	7	6	6	6	6	6	6	6
600	7	6	6	6	6	5	5	5	5	5	6	5	5	5	5	5	5	5

All sides open

*The values are given according to the Beaufort scale.

**Calculated for Products with a front height of 250 cm according to Eurocode EN 1991-1-4 Terrain Category 4.

*** You can ask for new calculations for special designs.

PANORAMA PLUS Wall / Ceiling

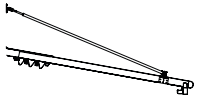

Width

	2 RAILS					3 RAILS									4 RAILS								FS4	FS9	FS9-S
	250 cm	300 cm	350 cm	400 cm	450 cm	500 cm	550 cm	600 cm	650 cm	700 cm	750 cm	800 cm	850 cm	900 cm	950 cm	1000 cm	1050 cm	1100 cm	1150 cm	1200 cm	1250 cm	1300 cm			
200 cm	€ 4.872	€ 5.110	€ 5.444	€ 5.785	€ 6.022	€ 7.076	€ 7.307	€ 7.540	€ 7.981	€ 8.176	€ 8.339	€ 8.568	€ 8.799	€ 9.030	€ 10.191	€ 10.419	€ 10.649	€ 10.879	€ 11.109	€ 11.288	€ 11.595	€ 11.951	€ 734	€ 150	€ 199
250 cm	€ 5.085	€ 5.450	€ 5.776	€ 6.022	€ 6.266	€ 7.421	€ 7.788	€ 8.027	€ 8.352	€ 8.554	€ 8.725	€ 9.089	€ 9.455	€ 9.565	€ 10.689	€ 10.926	€ 11.289	€ 11.526	€ 11.764	€ 11.949	€ 12.267	€ 12.630	€ 811	€ 181	€ 249
300 cm	€ 5.459	€ 5.867	€ 6.234	€ 6.524	€ 6.811	€ 8.114	€ 8.525	€ 8.808	€ 9.177	€ 9.419	€ 9.635	€ 10.041	€ 10.451	€ 10.608	€ 11.850	€ 12.131	€ 12.540	€ 12.819	€ 13.102	€ 13.323	€ 13.684	€ 14.089	€ 887	€ 212	€ 299
350 cm	€ 5.800	€ 6.095	€ 6.470	€ 6.886	€ 7.182	€ 8.595	€ 8.889	€ 9.307	€ 9.685	€ 9.931	€ 10.156	€ 10.573	€ 10.996	€ 11.155	€ 12.612	€ 12.901	€ 13.194	€ 13.481	€ 13.896	€ 14.125	€ 14.493	€ 14.782	€ 963	€ 243	€ 349
400 cm	€ 6.021	€ 6.325	€ 6.708	€ 7.133	€ 7.436	€ 8.950	€ 9.253	€ 9.679	€ 10.064	€ 10.319	€ 10.553	€ 10.976	€ 11.404	€ 11.577	€ 13.124	€ 13.422	€ 13.723	€ 14.019	€ 14.443	€ 14.677	€ 15.055	€ 15.351	€ 1.040	€ 274	€ 399
450 cm	€ 6.249	€ 6.561	€ 6.952	€ 7.385	€ 7.696	€ 9.317	€ 9.629	€ 10.063	€ 10.456	€ 10.718	€ 10.960	€ 11.392	€ 11.828	€ 12.008	€ 13.650	€ 13.957	€ 14.263	€ 14.569	€ 15.002	€ 15.241	€ 15.627	€ 15.932	€ 1.116	€ 305	€ 449
500 cm	€ 6.472	€ 6.791	€ 7.190	€ 7.632	€ 7.951	€ 9.676	€ 9.993	€ 10.437	€ 10.841	€ 11.108	€ 11.357	€ 11.799	€ 12.246	€ 12.432	€ 14.165	€ 14.480	€ 14.796	€ 15.108	€ 15.549	€ 15.796	€ 16.191	€ 16.504	€ 1.192	€ 336	€ 499
550 cm	€ 6.695	€ 7.021	€ 7.429	€ 7.878	€ 8.206	€ 10.035	€ 10.358	€ 10.811	€ 11.226	€ 11.498	€ 11.754	€ 12.205	€ 12.663	€ 12.855	€ 14.680	€ 15.003	€ 15.329	€ 15.647	€ 16.097	€ 16.352	€ 16.755	€ 17.077	€ 1.269	€ 367	€ 549
600 cm	€ 6.917	€ 7.251	€ 7.667	€ 8.125	€ 8.461	€ 10.394	€ 10.723	€ 11.186	€ 11.611	€ 11.888	€ 12.151	€ 12.612	€ 13.080	€ 13.278	€ 15.195	€ 15.527	€ 15.862	€ 16.186	€ 16.644	€ 16.907	€ 17.319	€ 17.649	€ 1.345	€ 398	€ 598

FS3	€ 149	€ 156	€ 170	€ 187	€ 203	€ 218	€ 234	€ 249	€ 265	€ 280	€ 360	€ 376	€ 391	€ 407	€ 423	€ 439	€ 454	€ 470	€ 485	€ 501	€ 516	€ 532
FS5-A	€ 27	€ 35	€ 41	€ 46	€ 54	€ 60	€ 67	€ 73	€ 80	€ 86	€ 93	€ 99	€ 106	€ 112	€ 119	€ 125	€ 132	€ 138	€ 145	€ 151	€ 159	€ 165
FS5-E	€ 38	€ 48	€ 56	€ 64	€ 74	€ 82	€ 92	€ 100	€ 110	€ 118	€ 128	€ 136	€ 146	€ 154	€ 164	€ 172	€ 182	€ 190	€ 200	€ 209	€ 218	€ 227

FS3	Gutter System
FS5-A	Additional Fabric Support Profile (Standard)
FS5-E	Additional Fabric Support Profile (3 Axis)
FS4	Additional Rail for PLUS Series - Al. - 120x150mm
FS8	Lighting System
FS9	Side Beam for PLUS Series - Al. - 50x150mm
FS9-S	Side Beam for PLUS Series - Al. - 100x150mm (Special)

FS8		LED TYPE & MODULE		
		2 LED	3 LED	4 LED
FS8-S	SPOT	€ 125	€ 152	€ 179
FS8-L	LINEAR	€ 179	€ 233	-
FS8-E	3 AXIS	€ 206	€ 268	-

* FS9 Side Beam is not included in the price
* FS Flexy Plain/3D or Stam 6002 is included in the price
* Motor and Remote control is included in the price
* RAL Colours specified in Aluminium coating catalogue are included in price. Any other RAL colours which are existing in our Supplier's stock can be applied without extra cost.
* Standard colours are RAL9010, RAL7040, RAL1013, RAL7046, RAL9004, RAL3022, RAL120-2, RAL7036, RAL8019, RAL120-5, RAL8025, RAL4001, RAL620-3, RAL5008
* Painting cost has to be min. 125€
* Plastic parts coloured only specified colours

DEDUCTIONS

Price deduction can apply only front pillars, back pillars and side beam. The price of the front pillar, back pillar and side beam can be deducted from options price.

OPTIONS

FS11	Deco ceiling cover	€ 46	m^2
FS12	Izo-Pro ceiling cover (up to 800 cm width)	€ 39	m^2
FS15	Side beam pillar (50x100mm - Al)	€ 174	pcs
FS15-B	Side beam pillar (100x100mm - Al)	€ 335	pcs
FS16	Wood effect (*Price difference for standart patterns (up to 700cm projection) (*Can not be applied to steel construction or freestanding products with base plate.)	10% of product price	
FS19	Fix louver	€ 46	lm
FS24	W96 Ceiling Cover	€ 53	m^2
FS25	Fabric support profile special color	€ 11	m^2
FS26	Exclusive fabric difference	€ 31	m^2
FS27	3 Axis lighting fabric support profile difference	€ 9	m^2
FS28-1	Stainless steel chain - 100 cm	€ 46	1m
FS28-2	Stainless steel chain - 200 cm	€ 89	2m
FS28-3	Stainless steel chain - 300 cm	€ 134	3m
FS28-4	Stainless steel chain - 400 cm	€ 179	4m
FS29-1	Sun Sensor (SUNIS) (with Universal Receiver, it's included in the price)	€ 596	pcs
FS29-2	Wind Sensor (EOLIS RTS) (with Universal Receiver, it's included in the price)	€ 367	pcs
FS29-3	Sun and Wind Sensor (SOLIRIS) (with Universal Receiver, it's included in the price)	€ 459	pcs
FS30	CONNEXOON	€246	pcs
FS31-1	Remote Control - PURE - Telis 1	€55	pcs
FS31-4	Remote Control - PURE - Telis 4	€93	pcs
FS31-16	Remote Control - PURE - Telis 16	€264	pcs
FS32-1	Remote Control - PATIO - Telis 1	€76	pcs
FS32-4	Remote Control - PATIO - Telis 4	€123	pcs
FS33-1	Remote Control - LOUNGE - Telis 1	€93	pcs
FS33-4	Remote Control - LOUNGE - Telis 4	€133	pcs
FS34-1	Remote Control - MODULIS PURE - Telis 1	€125	pcs
FS34-4	Remote Control - MODULIS PURE - Telis 4	€192	pcs
FS35-1	Remote Control - MODULIS LOUNGE - Telis 1	€144	pcs
FS35-4	Remote Control - MODULIS LOUNGE - Telis 4	€220	pcs

*** Can't apply a sensor to the single motor product. For further information please contact with PALMIYE**

EXTENSIONS

Rail	PLUS - 120x150mm	€ 209	lm
Beam	Al. 42x150mm	€ 65	lm
Beam	Al. 50x150mm	€ 115	lm
Beam	Al. 100x150mm	€ 96	lm
Beam	St. 100x150x3mm	€ 190	lm
Beam	St. 100x150x5mm	€ 246	lm
Beam	St. 100x200x3mm	€ 193	lm
Beam	St. 100x200x5mm	€ 293	lm
Fabric protection cover	Al. - 63x___cm	€ 37	m^2
Gutter	Special Profile	€ 28	lm

PRICE DIFFERENCE

BEAM GROUP

Back Beam	**Standard**	Al. 42x150mm		
	to	Al. 50x150mm	€ 50	lm
		St. 50x150x3mm	€ 62	lm
		St. 50x150x5mm	€ 122	lm
		Al. 100x150mm	€ 30	lm
		St. 100x150x3mm	€ 125	lm
		St. 100x150x5mm	€ 181	lm
		St. 100x200x3mm	€ 128	lm
		St. 100x200x5mm	€ 228	lm
Front Beam	**Standard**	**Al. 100x150mm**		
	to	St. 100x150x3mm	€ 95	lm
		St. 100x150x5mm	€ 151	lm
		St. 100x200x3mm	€ 98	lm
		St. 100x200x5mm	€ 197	lm

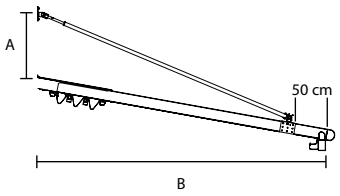

STANDARD "A" VALUES

B (cm)	350	400	450	500	550	600
A (cm)	50	60	70	80	90	100

PANORAMA

PLUS
Freestanding

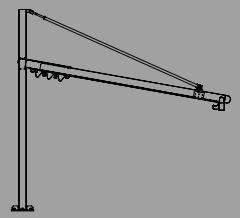

MAXIMUM DIMENSIONS

	WIDTH	PROJECTION
2 RAILS	450 cm	600 cm
3 RAILS	900 cm	600 cm
4 RAILS	1300 cm	600 cm

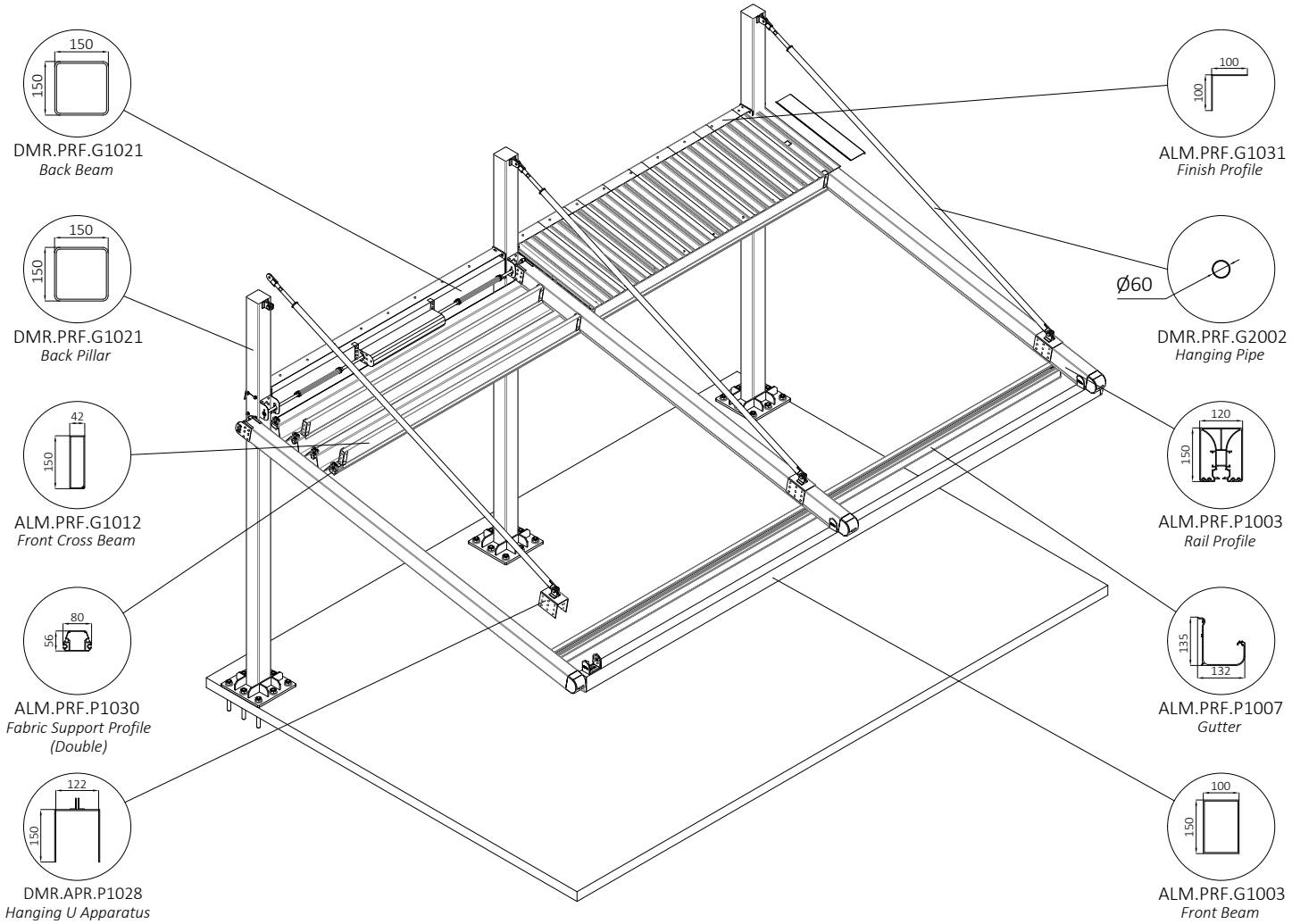

TECHNICAL FEATURES

COLLECTED FABRIC DIMENSIONS

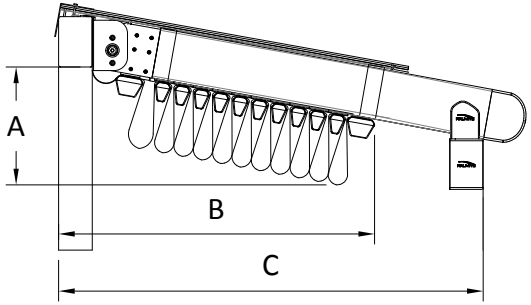

Projection cm

No of Fabric Support Profiles	185	235	284	334	383	433	482	532	581	C
4	35									66
5		36								73
6			37							79
7				38						86
8					39					92
9						40				99
10							41			105
11								42		112
12									43	118
				A						B

*Calculated according to a slope of 15%

DRAINAGE CALCULATION

Type	Max. m²
Full	39 m²/pc
Half	18 m²/pc

* per drainage

There should be at least one drainage, each 8 m length gutter.

MINIMUM SLOPE CHART

Projection	Slope										
	6,4-7,9%	7,4-8,8%	8,4-9,7%	9,4-10,8%	10,4-12%	11,2-12,7%	12-13,4%	13-14,5%	14-15,7%	15-16,6%	16-17,6%
	Rail Center										
	200	**225**	**250**	**275**	**300**	**325**	**350**	**375**	**400**	**425**	**450**
250	16	19	21	24	26	28	30	33	35	38	40
300	20	23	26	29	31	34	37	40	42	45	48
350	23	27	30	34	37	40	43	46	49	53	56
400	27	31	35	39	42	46	49	53	57	61	64
450	32	36	40	44	48	52	56	60	64	69	73
500	36	41	45	50	54	59	63	68	72	77	81
550	40	45	50	55	60	65	70	75	80	85	90
600	44	50	55	61	66	72	77	83	88	94	99

For back height of system 25 cm should be added to slope value.

*Note: Max. slope can be up to 25%

WIND RESISTANCE

WIDTH

PROJECTION (cm)	450	500	550	600	650	700	750	800	850	900	950	1000	1050	1100	1150	1200	1250	1300
400	10	10	10	9	9	9	9	8	8	8	9	9	9	9	8	8	8	8
450	9	9	9	8	8	8	8	7	7	7	8	8	8	8	7	7	7	7
500	8	8	8	8	8	7	7	7	7	6	8	7	7	7	7	7	7	6
550	8	8	7	7	7	7	6	6	6	6	7	7	7	6	6	6	6	6
600	7	7	7	6	6	6	6	6	5	5	6	6	6	6	6	6	5	5

All sides open

*The values are given according to the Beaufort scale.

**Calculated for Products with a front height of 250 cm according to Eurocode EN 1991-1-4 Terrain Category 4.

*** You can ask for new calculations for special designs.

PANORAMA PLUS Freestanding

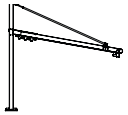

Width

	2 RAILS					3 RAILS									4 RAILS								FS4	FS9	FS9-S
	250 cm	300 cm	350 cm	400 cm	450 cm	500 cm	550 cm	600 cm	650 cm	700 cm	750 cm	800 cm	850 cm	900 cm	950 cm	1000 cm	1050 cm	1100 cm	1150 cm	1200 cm	1250 cm	1300 cm			
200 cm	€ 5.793	€ 6.031	€ 6.365	€ 6.706	€ 6.943	€ 8.458	€ 8.689	€ 8.922	€ 9.363	€ 9.558	€ 9.720	€ 9.949	€ 10.181	€ 10.412	€ 12.034	€ 12.261	€ 12.492	€ 12.722	€ 12.952	€ 13.131	€ 13.437	€ 13.794	€ 734	€ 150	€ 199
250 cm	€ 6.006	€ 6.371	€ 6.698	€ 6.943	€ 7.188	€ 8.802	€ 9.170	€ 9.409	€ 9.734	€ 9.936	€ 10.107	€ 10.470	€ 10.836	€ 10.947	€ 12.531	€ 12.768	€ 13.132	€ 13.368	€ 13.606	€ 13.791	€ 14.109	€ 14.472	€ 811	€ 181	€ 249
300 cm	€ 6.381	€ 6.788	€ 7.155	€ 7.445	€ 7.733	€ 9.496	€ 9.906	€ 10.190	€ 10.559	€ 10.801	€ 11.016	€ 11.423	€ 11.833	€ 11.989	€ 13.692	€ 13.974	€ 14.383	€ 14.662	€ 14.944	€ 15.166	€ 15.526	€ 15.931	€ 887	€ 212	€ 299
350 cm	€ 6.722	€ 7.016	€ 7.392	€ 7.808	€ 8.103	€ 9.977	€ 10.271	€ 10.689	€ 11.066	€ 11.313	€ 11.537	€ 11.955	€ 12.378	€ 12.537	€ 14.454	€ 14.744	€ 15.036	€ 15.323	€ 15.738	€ 15.967	€ 16.335	€ 16.624	€ 963	€ 243	€ 349
400 cm	€ 6.942	€ 7.246	€ 7.629	€ 8.054	€ 8.357	€ 10.332	€ 10.635	€ 11.061	€ 11.446	€ 11.701	€ 11.934	€ 12.358	€ 12.786	€ 12.959	€ 14.967	€ 15.265	€ 15.565	€ 15.861	€ 16.285	€ 16.519	€ 16.897	€ 17.194	€ 1.040	€ 274	€ 399
450 cm	€ 7.170	€ 7.482	€ 7.873	€ 8.306	€ 8.617	€ 10.699	€ 11.010	€ 11.444	€ 11.838	€ 12.100	€ 12.342	€ 12.774	€ 13.210	€ 13.390	€ 15.493	€ 15.799	€ 16.105	€ 16.412	€ 16.845	€ 17.083	€ 17.469	€ 17.774	€ 1.116	€ 305	€ 449
500 cm	€ 7.393	€ 7.712	€ 8.112	€ 8.553	€ 8.872	€ 11.058	€ 11.375	€ 11.819	€ 12.223	€ 12.490	€ 12.739	€ 13.180	€ 13.627	€ 13.813	€ 16.008	€ 16.322	€ 16.638	€ 16.951	€ 17.392	€ 17.639	€ 18.033	€ 18.347	€ 1.192	€ 336	€ 499
550 cm	€ 7.616	€ 7.942	€ 8.350	€ 8.800	€ 9.127	€ 11.417	€ 11.740	€ 12.193	€ 12.608	€ 12.880	€ 13.136	€ 13.587	€ 14.045	€ 14.237	€ 16.523	€ 16.846	€ 17.171	€ 17.490	€ 17.939	€ 18.194	€ 18.597	€ 18.919	€ 1.269	€ 367	€ 549
600 cm	€ 7.839	€ 8.172	€ 8.589	€ 9.046	€ 9.383	€ 11.776	€ 12.105	€ 12.568	€ 12.993	€ 13.270	€ 13.533	€ 13.993	€ 14.462	€ 14.660	€ 17.038	€ 17.369	€ 17.704	€ 18.028	€ 18.486	€ 18.750	€ 19.161	€ 19.491	€ 1.345	€ 398	€ 598

FS3	€ 149	€ 156	€ 170	€ 187	€ 203	€ 218	€ 234	€ 249	€ 265	€ 280	€ 360	€ 376	€ 391	€ 407	€ 423	€ 439	€ 454	€ 470	€ 485	€ 501	€ 516	€ 532
FS5-A	€ 27	€ 35	€ 41	€ 46	€ 54	€ 60	€ 67	€ 73	€ 80	€ 86	€ 93	€ 99	€ 106	€ 112	€ 119	€ 125	€ 132	€ 138	€ 145	€ 151	€ 159	€ 165
FS5-E	€ 38	€ 48	€ 56	€ 64	€ 74	€ 82	€ 92	€ 100	€ 110	€ 118	€ 128	€ 136	€ 146	€ 154	€ 164	€ 172	€ 182	€ 190	€ 200	€ 209	€ 218	€ 227

FS3	Gutter System
FS5-A	Additional Fabric Support Profile (Standard)
FS5-E	Additional Fabric Support Profile (3 Axis)
FS4	Additional Rail for PLUS Series - Al. - 120x150mm
FS8	Lighting System
FS9	Side Beam for PLUS Series - Al. - 50x150mm
FS9-S	Side Beam for PLUS Series - Al. - 100x150mm (Special)

FS8		LED TYPE & MODULE		
		2 LED	3 LED	4 LED
FS8-S	SPOT	€ 125	€ 152	€ 179
FS8-L	LINEAR	€ 179	€ 233	-
FS8-E	3 AXIS	€ 206	€ 268	-

* FS9 Side Beam is not included in the price
* FS Flexy Plain/3D or Stam 6002 is included in the price
* Motor and Remote control is included in the price
* RAL Colours specified in Aluminium coating catalogue are included in price. Any other RAL colours which are existing in our Supplier's stock can be applied without extra cost.
* Standard colours are RAL9010, RAL7040, RAL1013, RAL7046, RAL9004, RAL3022, RAL120-2, RAL7036, RAL8019, RAL120-5, RAL8025, RAL4001, RAL620-3, RAL5008
* Painting cost has to be min. 125€
* Plastic parts coloured only specified colours

DEDUCTIONS

Price deduction can apply only front pillars, back pillars and side beam. The price of the front pillar, back pillar and side beam can be deducted from options price.

OPTIONS

FS10-150ST3	Extra pillar (150x150x3mm St.)	€ 748	pcs
FS10-150ST5	Extra pillar (150x150x5mm St.)	€ 1.116	pcs
FS11	Deco ceiling cover	€ 46	m^2
FS12	Izo-Pro ceiling cover (up to 800 cm width)	€ 39	m^2
FS15	Side beam pillar (50x100mm - Al)	€ 174	pcs
FS15-B	Side beam pillar (100x100mm - Al)	€ 335	pcs
FS16	Wood effect (*Price difference for standart patterns (up to 700cm projection) (*Can not be applied to steel construction or freestanding products with base plate.)	10% of product price	
FS19	Fix louver	€ 46	lm
FS24	W96 Ceiling Cover	€ 53	m^2
FS25	Fabric support profile special color	€ 11	m^2
FS26	Exclusive fabric difference	€ 31	m^2
FS27	3 Axis lighting fabric support profile difference	€ 9	m^2
FS28-1	Stainless steel chain - 100 cm	€ 46	1m
FS28-2	Stainless steel chain - 200 cm	€ 89	2m
FS28-3	Stainless steel chain - 300 cm	€ 134	3m
FS28-4	Stainless steel chain - 400 cm	€ 179	4m
FS29-1	Sun Sensor (SUNIS) (with Universal Receiver, it's included in the price)	€ 596	pcs
FS29-2	Wind Sensor (EOLIS RTS) (with Universal Receiver, it's included in the price)	€ 367	pcs
FS29-3	Sun and Wind Sensor (SOLIRIS) (with Universal Receiver, it's included in the price)	€ 459	pcs
FS30	CONNEXOON	€246	pcs
FS31-1	Remote Control - PURE - Telis 1	€55	pcs
FS31-4	Remote Control - PURE - Telis 4	€93	pcs
FS31-16	Remote Control - PURE - Telis 16	€264	pcs
FS32-1	Remote Control - PATIO - Telis 1	€76	pcs
FS32-4	Remote Control - PATIO - Telis 4	€123	pcs
FS33-1	Remote Control - LOUNGE - Telis 1	€93	pcs
FS33-4	Remote Control - LOUNGE - Telis 4	€133	pcs
FS34-1	Remote Control - MODULIS PURE - Telis 1	€125	pcs
FS34-4	Remote Control - MODULIS PURE - Telis 4	€192	pcs
FS35-1	Remote Control - MODULIS LOUNGE - Telis 1	€144	pcs
FS35-4	Remote Control - MODULIS LOUNGE - Telis 4	€220	pcs

*** Can't apply a sensor to the single motor product. For further information please contact with PALMIYE**

EXTENSIONS

Rail	PLUS - 120x150mm	€ 209	lm
Beam	Al. 42x150mm	€ 65	lm
Beam	Al. 50x150mm	€ 115	lm
Beam	Al. 100x150mm	€ 96	lm
Beam	St. 100x150x3mm	€ 190	lm
Beam	St. 100x150x5mm	€ 246	lm
Beam	St. 100x200x3mm	€ 193	lm
Beam	St. 100x200x5mm	€ 293	lm
Fabric protection cover	Al. - 63x___cm	€ 37	m^2
Gutter	Special Profile	€ 28	lm
Pillar	St. 150x150x3mm	€ 261	lm
Pillar	St. 150x150x5mm	€ 390	lm

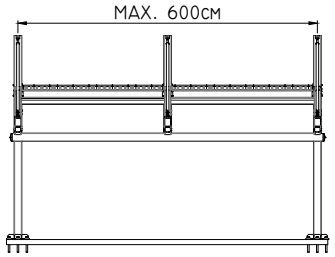

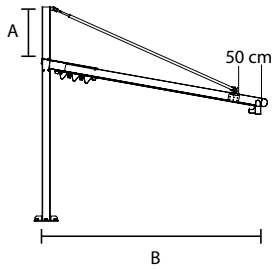

PRICE DIFFERENCE

BEAM GROUP

Back Beam	**Standard**	**St. 150x150x3mm**		
	to	St. 150x150x5mm	€ 95	lm
Front Beam	**Standard**	**Al. 100x150mm**		
	to	St. 100x150x3mm	€ 95	lm
		St. 100x150x5mm	€ 151	lm
		St. 100x200x3mm	€ 98	lm
		St. 100x200x5mm	€ 197	lm

PILLAR GROUP

Front Pillar	**Standard**	**St. 150x150x3mm**		
	to	St.150x150x5mm	367€	lm

- The product produces as 3 mm steel beam and pillar.
- The front beam can't produces as a steel.
- With pillar reduction applications, Back Half Pillar must be installed at the back of each rail shaft.
- In standard applications 1 back pillar St. 150x150x3mm should be added to each rail shaft.
- When pillar reduction is applied, steel pillars should be 150x150x5 mm.
- Ground flanges are 380x380x15 mm

- Max. pillar length: 480 cm

STANDARD "A" VALUES

B (cm)	350	400	450	500	550	600
A (cm)	50	60	70	80	90	100

PANORAMA

PLUS

Wall / Ceiling with Buttress

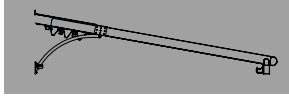

MAXIMUM DIMENSIONS

	WIDTH	PROJECTION
2 RAILS	450 cm	400 cm

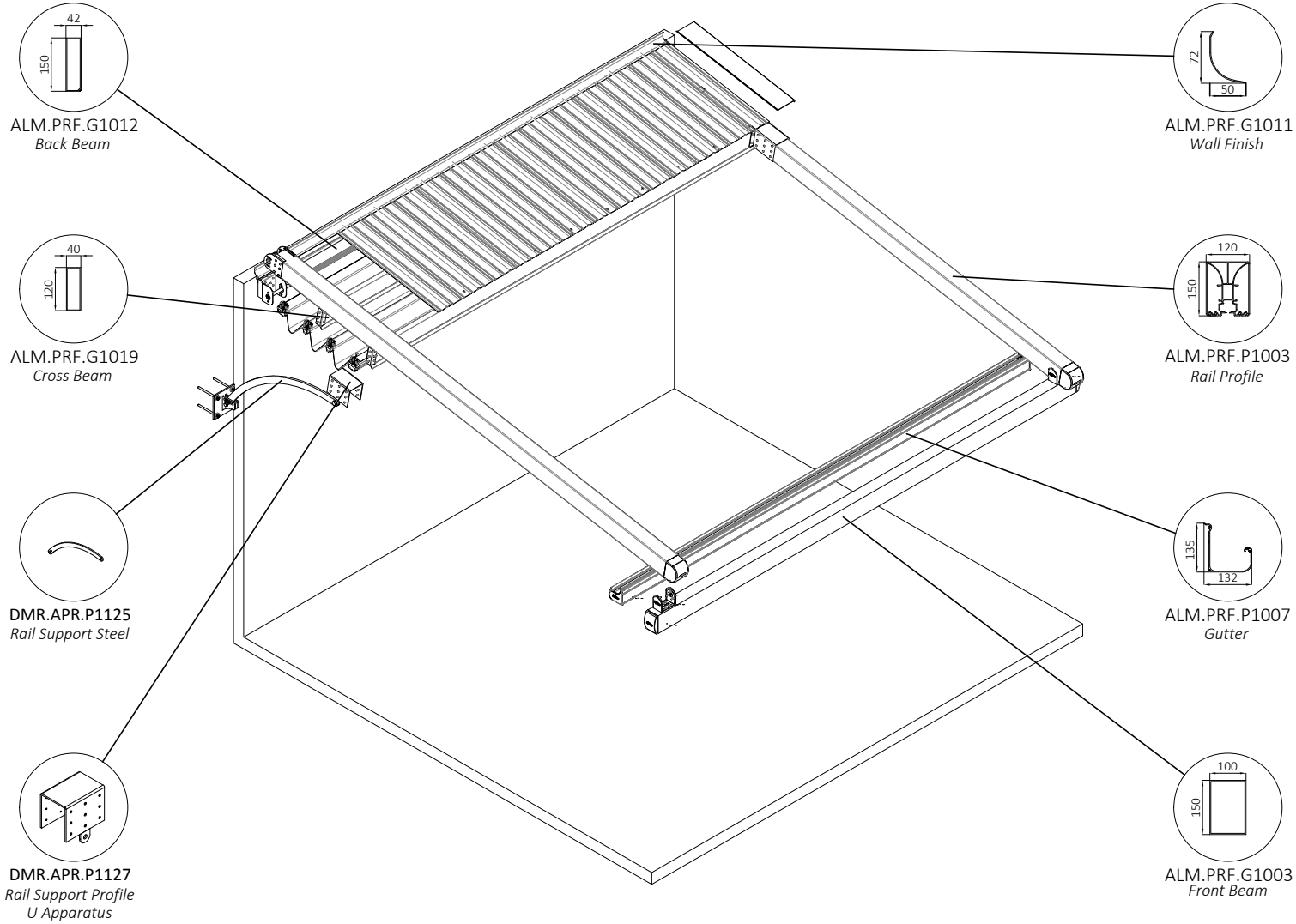

TECHNICAL FEATURES

COLLECTED FABRIC DIMENSIONS

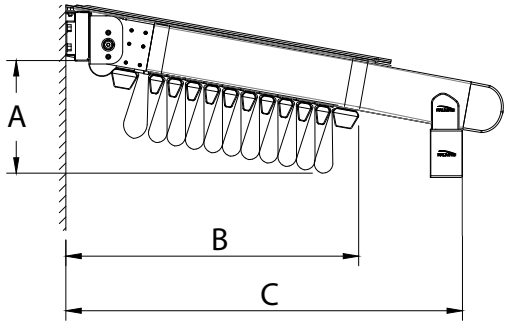

No of Fabric Support Profiles	Projection cm					
	185	235	284	334	383	C
4	26					36
5		27				42
6			27			48
7				28		54
8					29	60
			A			B

*Calculated according to a slope of 15%

DRAINAGE CALCULATION

Type	Max. m²
Full	39 m²/pc
Half	18 m²/pc

* per drainage

There should be at least one drainage, each 8 m length gutter.

MINIMUM SLOPE CHART

Slope	6,4-7,9%	7,4-8,8%	8,4-9,7%	9,4-10,8%	10,4-12%	11,2-12,7%	12-13,4%	13-14,5%	14-15,7%	15-16,6%	16-17,6%
	Rail Center										
	200	**225**	**250**	**275**	**300**	**325**	**350**	**375**	**400**	**425**	**450**
Projection **250**	16	19	21	24	26	28	30	33	35	38	40
300	20	23	26	29	31	34	37	40	42	45	48
350	23	27	30	34	37	40	43	46	49	53	56
400	27	31	35	39	42	46	49	53	57	61	64

*Note: Max. slope can be up to 25%

WIND RESISTANCE

PROJECTION	WIDTH **250**	**300**	**350**	**400**	**450**
200	11	11	11	11	11
250	11	11	11	11	11
300	11	11	11	11	11
350	11	11	10	10	10
400	10	10	10	9	9

All sides open

*The values are given according to the Beaufort scale.

**Calculated for Products with a front height of 250 cm according to Eurocode EN 1991-1-4 Terrain Category 4.

*** You can ask for new calculations for special designs.

PANORAMA PLUS Wall / Ceiling with Buttress

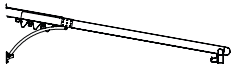

Width

Projection

	2 RAILS					FS4
	250 cm	300 cm	350 cm	400 cm	450 cm	
200 cm	€ 4.872	€ 5.110	€ 5.444	€ 5.785	€ 6.022	€ 734
250 cm	€ 5.085	€ 5.450	€ 5.776	€ 6.022	€ 6.266	€ 811
300 cm	€ 5.459	€ 5.867	€ 6.234	€ 6.524	€ 6.811	€ 887
350 cm	€ 5.800	€ 6.095	€ 6.470	€ 6.886	€ 7.182	€ 963
400 cm	€ 6.021	€ 6.325	€ 6.708	€ 7.133	€ 7.436	€ 1.040

*This product can't produces as a module.

FS3	€ 149	€ 156	€ 170	€ 187	€ 203
FS5-A	€ 27	€ 35	€ 41	€ 46	€ 54
FS5-E	€ 38	€ 48	€ 56	€ 64	€ 74

FS3	Gutter System
FS5-A	Additional Fabric Support Profile (Standard)
FS5-E	Additional Fabric Support Profile (3 Axis)
FS4	Additional Rail for PLUS Series - Al. - 120x150mm
FS8	Lighting System

FS8		LED TYPE & MODULE		
		2 LED	3 LED	4 LED
FS8-S	SPOT	€ 125	€ 152	€ 179
FS8-L	LINEAR	€ 179	€ 233	-
FS8-E	3 AXIS	€ 206	€ 268	-

* FS Flexy Plain/3D or Stam 6002 is included in the price
* Motor and Remote control is included in the price
* RAL Colours specified in Aluminium coating catalogue are included in price. Any other RAL colours which are existing in our Supplier's stock can be applied without extra cost.
* Standard colours are RAL9010, RAL7040, RAL1013, RAL7046, RAL9004, RAL3022, RAL120-2, RAL7036, RAL8019, RAL120-5, RAL8025, RAL4001, RAL620-3, RAL5008
* Painting cost has to be min. 125€
* Plastic parts coloured only specified colours

DEDUCTIONS

Price deduction can apply only front pillars, back pillars and side beam. The price of the front pillar, back pillar and side beam can be deducted from options price.

OPTIONS

FS11	Deco ceiling cover	€ 46	m^2
FS12	Izo-Pro ceiling cover (up to 800 cm width)	€ 39	m^2
FS16	Wood effect (*Price difference for standart patterns (up to 700cm projection) (*Can not be applied to steel construction or freestanding products with base plate.)	10% of product price	
FS19	Fix louver	€ 46	lm
FS24	W96 Ceiling Cover	€ 53	m^2
FS25	Fabric support profile special color	€ 11	m^2
FS26	Exclusive fabric difference	€ 31	m^2
FS27	3 Axis lighting fabric support profile difference	€ 9	m^2
FS28-1	Stainless steel chain - 100 cm	€ 46	1m
FS28-2	Stainless steel chain - 200 cm	€ 89	2m
FS28-3	Stainless steel chain - 300 cm	€ 134	3m
FS28-4	Stainless steel chain - 400 cm	€ 179	4m
FS29-1	Sun Sensor (SUNIS) (with Universal Receiver, it's included in the price)	€ 596	pcs
FS29-2	Wind Sensor (EOLIS RTS) (with Universal Receiver, it's included in the price)	€ 367	pcs
FS29-3	Sun and Wind Sensor (SOLIRIS) (with Universal Receiver, it's included in the price)	€ 459	pcs
FS30	CONNEXOON	€246	pcs
FS31-1	Remote Control - PURE - Telis 1	€55	pcs
FS31-4	Remote Control - PURE - Telis 4	€93	pcs
FS31-16	Remote Control - PURE - Telis 16	€264	pcs
FS32-1	Remote Control - PATIO - Telis 1	€76	pcs
FS32-4	Remote Control - PATIO - Telis 4	€123	pcs
FS33-1	Remote Control - LOUNGE - Telis 1	€93	pcs
FS33-4	Remote Control - LOUNGE - Telis 4	€133	pcs
FS34-1	Remote Control - MODULIS PURE - Telis 1	€125	pcs
FS34-4	Remote Control - MODULIS PURE - Telis 4	€192	pcs
FS35-1	Remote Control - MODULIS LOUNGE - Telis 1	€144	pcs
FS35-4	Remote Control - MODULIS LOUNGE - Telis 4	€220	pcs

*** Can't apply a sensor to the single motor product. For further information please contact with PALMIYE**

EXTENSIONS

Rail	PLUS - 120x150mm	€ 209	lm
Beam	Al. 42x150mm	€ 65	lm
Beam	Al. 50x150mm	€ 115	lm
Beam	Al. 100x150mm	€ 96	lm
Beam	St. 100x150x3mm	€ 190	lm
Beam	St. 100x150x5mm	€ 246	lm
Beam	St. 100x200x3mm	€ 193	lm
Beam	St. 100x200x5mm	€ 293	lm
Fabric protection cover	Al. - 63x___cm	€ 37	m^2
Gutter	Special Profile	€ 28	lm

PRICE DIFFERENCE

BEAM GROUP

Back Beam	**Standard**	Al. 42x150mm		
	to	Al. 50x150mm	€ 50	lm
		St. 50x150x3mm	€ 62	lm
		St. 50x150x5mm	€ 122	lm
		Al. 100x150mm	€ 30	lm
		St. 100x150x3mm	€ 125	lm
		St. 100x150x5mm	€ 181	lm
		St. 100x200x3mm	€ 128	lm
		St. 100x200x5mm	€ 228	lm

Front Beam	**Standard**	**Al. 100x150mm**		
	to	St. 100x150x3mm	€ 95	lm
		St. 100x150x5mm	€ 151	lm
		St. 100x200x3mm	€ 98	lm
		St. 100x200x5mm	€ 197	lm

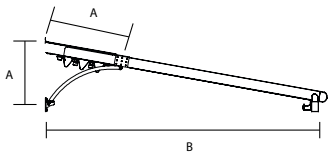

STANDARD "A" VALUES

B (cm)	250	300	350	400
A (cm)	70	80	90	100

PANORAMA

PLUS

Freestanding with Buttress

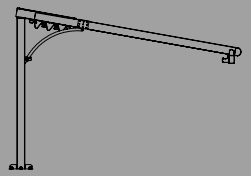

MAXIMUM DIMENSIONS

	WIDTH	PROJECTION
2 RAILS	450 cm	400 cm

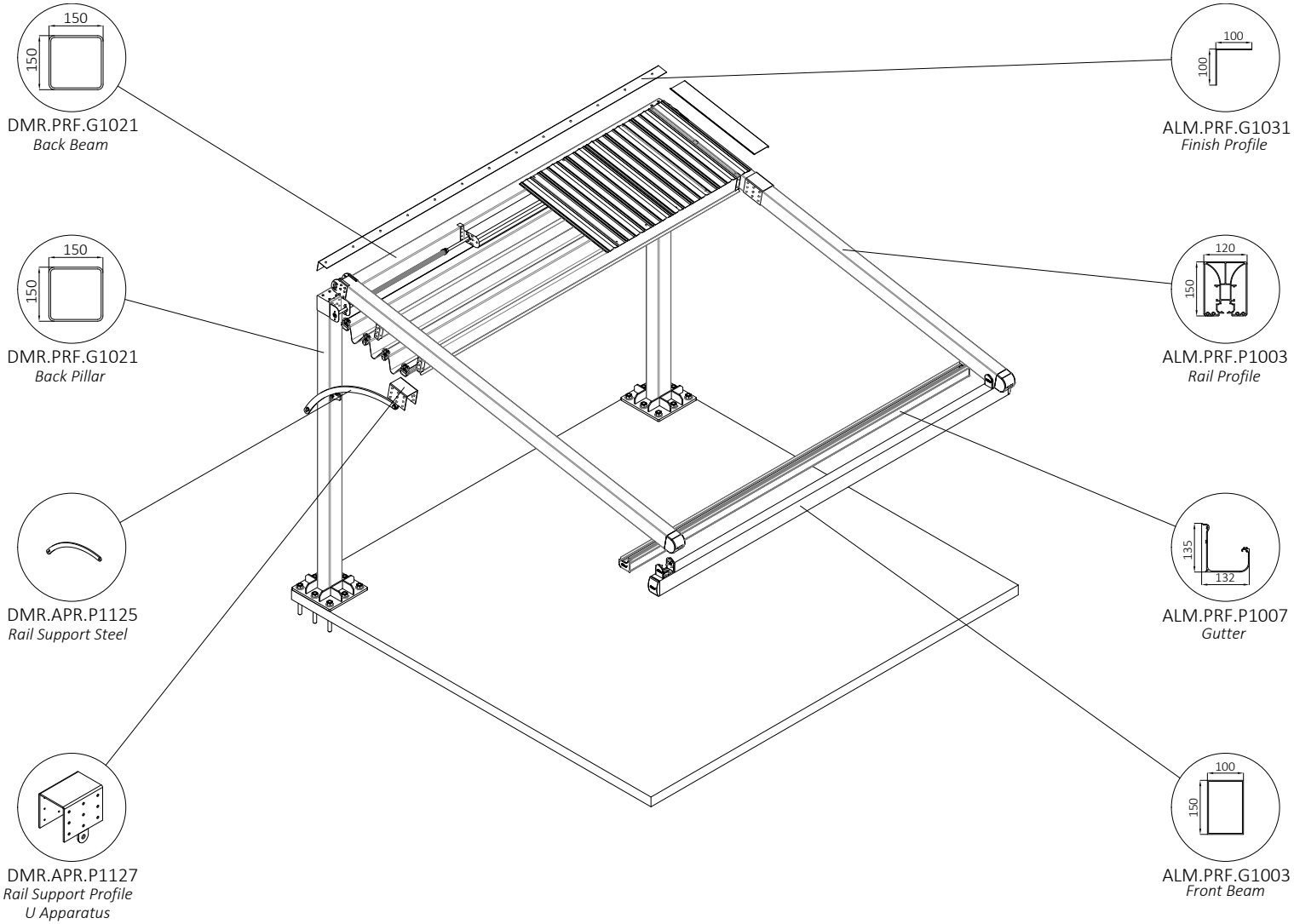

TECHNICAL FEATURES

COLLECTED FABRIC DIMENSIONS

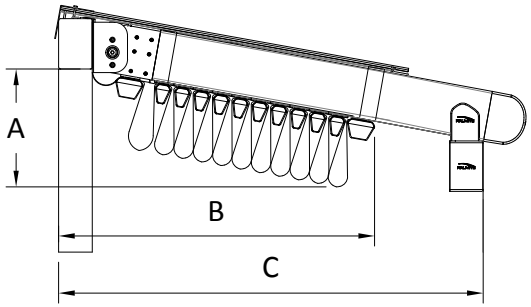

No of Fabric Support Profiles	Projection cm					
	185	235	284	334	383	C
4	35					66
5		36				73
6			37			79
7				38		86
8					39	92
		A				B

*Calculated according to a slope of 15%

DRAINAGE CALCULATION

Type	Max. m²
Full	39 m²/pc
Half	18 m²/pc

* per drainage

There should be at least one drainage, each 8 m length gutter.

MINIMUM SLOPE CHART

Projection	Slope										
	6,4-7,9%	7,4-8,8%	8,4-9,7%	9,4-10,8%	10,4-12%	11,2-12,7%	12-13,4%	13-14,5%	14-15,7%	15-16,6%	16-17,6%
	Rail Center										
	200	**225**	**250**	**275**	**300**	**325**	**350**	**375**	**400**	**425**	**450**
250	16	19	21	24	26	28	30	33	35	38	40
300	20	23	26	29	31	34	37	40	42	45	48
350	23	27	30	34	37	40	43	46	49	53	56
400	27	31	35	39	42	46	49	53	57	61	64

*Note: Max. slope can be up to 20%

WIND RESISTANCE

PROJECTION	WIDTH 250	300	350	400	450
200	11	11	11	11	11
250	11	11	11	11	11
300	11	11	11	11	11
350	11	11	10	10	10
400	10	10	10	9	9

All sides open

*The values are given according to the Beaufort scale.

**Calculated for Products with a front height of 250 cm according to Eurocode EN 1991-1-4 Terrain Category 4.

*** You can ask for new calculations for special designs.

PANORAMA PLUS Freestanding with Buttress

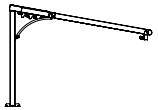

Width

Projection

	2 RAILS					FS4
	250 cm	300 cm	350 cm	400 cm	450 cm	
200 cm	€ 5.793	€ 6.031	€ 6.365	€ 6.706	€ 6.943	€ 734
250 cm	€ 6.006	€ 6.371	€ 6.698	€ 6.943	€ 7.188	€ 811
300 cm	€ 6.381	€ 6.788	€ 7.155	€ 7.445	€ 7.733	€ 887
350 cm	€ 6.722	€ 7.016	€ 7.392	€ 7.808	€ 8.103	€ 963
400 cm	€ 6.942	€ 7.246	€ 7.629	€ 8.054	€ 8.357	€ 1.040

*This product can't produces as a module.

FS3	€ 149	€ 156	€ 170	€ 187	€ 203
FS5-A	€ 27	€ 35	€ 41	€ 46	€ 54
FS5-E	€ 38	€ 48	€ 56	€ 64	€ 74

FS3	Gutter&Downpipe
FS4	Additional Rail (PLUS - 120x150mm Al.)
FS5-A	Additional Standard Fabric Support Profile
FS5-E	Additional 3 Axis Fabric Support Profile

FS8		LED TYPE & MODULE		
		2 LED	3 LED	4 LED
FS8-S	SPOT	€ 125	€ 152	€ 179
FS8-L	LINEAR	€ 179	€ 233	-
FS8-E	3 AXIS	€ 206	€ 268	-

* FS Flexy Plain/3D or Stam 6002 is included in the price
* Motor and Remote control is included in the price
* RAL Colours specified in Aluminium coating catalogue are included in price. Any other RAL colours which are existing in our Supplier's stock can be applied without extra cost.
* Standard colours are RAL9010, RAL7040, RAL1013, RAL7046, RAL9004, RAL3022, RAL120-2, RAL7036, RAL8019, RAL120-5, RAL8025, RAL4001, RAL620-3, RAL5008
* Painting cost has to be min. 125€
* Plastic parts coloured only specified colours

DEDUCTIONS

Price deduction can apply only front pillars, back pillars and side beam. The price of the front pillar, back pillar and side beam can be deducted from options price.

OPTIONS

FS11	Deco ceiling cover	€ 46	m^2
FS12	Izo-Pro ceiling cover (up to 800 cm width)	€ 39	m^2
FS16	Wood effect (*Price difference for standart patterns (up to 700cm projection) (*Can not be applied to steel construction or freestanding products with base plate.)	10% of product price	
FS19	Fix louver	€ 46	lm
FS24	W96 Ceiling Cover	€ 53	m^2
FS25	Fabric support profile special color	€ 11	m^2
FS26	Exclusive fabric difference	€ 31	m^2
FS27	3 Axis lighting fabric support profile difference	€ 9	m^2
FS28-1	Stainless steel chain - 100 cm	€ 46	1m
FS28-2	Stainless steel chain - 200 cm	€ 89	2m
FS28-3	Stainless steel chain - 300 cm	€ 134	3m
FS28-4	Stainless steel chain - 400 cm	€ 179	4m
FS29-1	Sun Sensor (SUNIS) (with Universal Receiver, it's included in the price)	€ 596	pcs
FS29-2	Wind Sensor (EOLIS RTS) (with Universal Receiver, it's included in the price)	€ 367	pcs
FS29-3	Sun and Wind Sensor (SOLIRIS) (with Universal Receiver, it's included in the price)	€ 459	pcs
FS30	CONNEXOON	€246	pcs
FS31-1	Remote Control - PURE - Telis 1	€55	pcs
FS31-4	Remote Control - PURE - Telis 4	€93	pcs
FS31-16	Remote Control - PURE - Telis 16	€264	pcs
FS32-1	Remote Control - PATIO - Telis 1	€76	pcs
FS32-4	Remote Control - PATIO - Telis 4	€123	pcs
FS33-1	Remote Control - LOUNGE - Telis 1	€93	pcs
FS33-4	Remote Control - LOUNGE - Telis 4	€133	pcs
FS34-1	Remote Control - MODULIS PURE - Telis 1	€125	pcs
FS34-4	Remote Control - MODULIS PURE - Telis 4	€192	pcs
FS35-1	Remote Control - MODULIS LOUNGE - Telis 1	€144	pcs
FS35-4	Remote Control - MODULIS LOUNGE - Telis 4	€220	pcs

*** Can't apply a sensor to the single motor product. For further information please contact with PALMIYE**

EXTENSIONS

Rail	PLUS - 120x150mm	€ 209	lm
Beam	Al. 100x150mm	€ 96	lm
Beam	St. 100x150x3mm	€ 190	lm
Beam	St. 100x150x5mm	€ 246	lm
Beam	St. 100x200x3mm	€ 193	lm
Beam	St. 100x200x5mm	€ 293	lm
Fabric protection cover	Al. - 63x___cm	€ 37	m^2
Gutter	Special Profile	€ 28	lm

PRICE DIFFERENCE

BEAM GROUP

Back Beam

Standard	**St. 150x150x3mm**		
to	St. 150x150x5mm	€ 95	lm

Front Beam

Standard	**Al. 100x150mm**		
to	St. 100x150x3mm	€ 95	lm
	St. 100x150x5mm	€ 151	lm
	St. 100x200x3mm	€ 98	lm
	St. 100x200x5mm	€ 197	lm

PILLAR GROUP

Front Pillar

Standard	**St. 150x150x3mm**		
to	St.150x150x5mm	367€	lm

- The product produces as 3 mm steel beam and pillar.
- The front beam can't produces as a steel.
- In standard applications 1 back pillar St. 150x150x3mm should be added to each rail shaft.
- When pillar reduction is applied, steel pillars should be 150x150x5 mm.
- Ground flanges are 380x380x15 mm

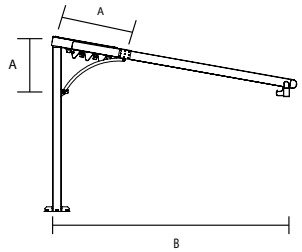

- Max. pillar length: 480 cm

STANDARD "A" VALUES

B (cm)	250	300	350	400
A (cm)	70	80	90	100

PANORAMA

COMPACT
Wall / Ceiling

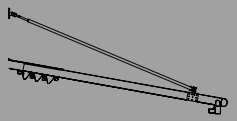

MAXIMUM DIMENSIONS

	WIDTH	PROJECTION
2 RAILS	450 cm	600 cm
3 RAILS	900 cm	600 cm
4 RAILS	1300 cm	600 cm

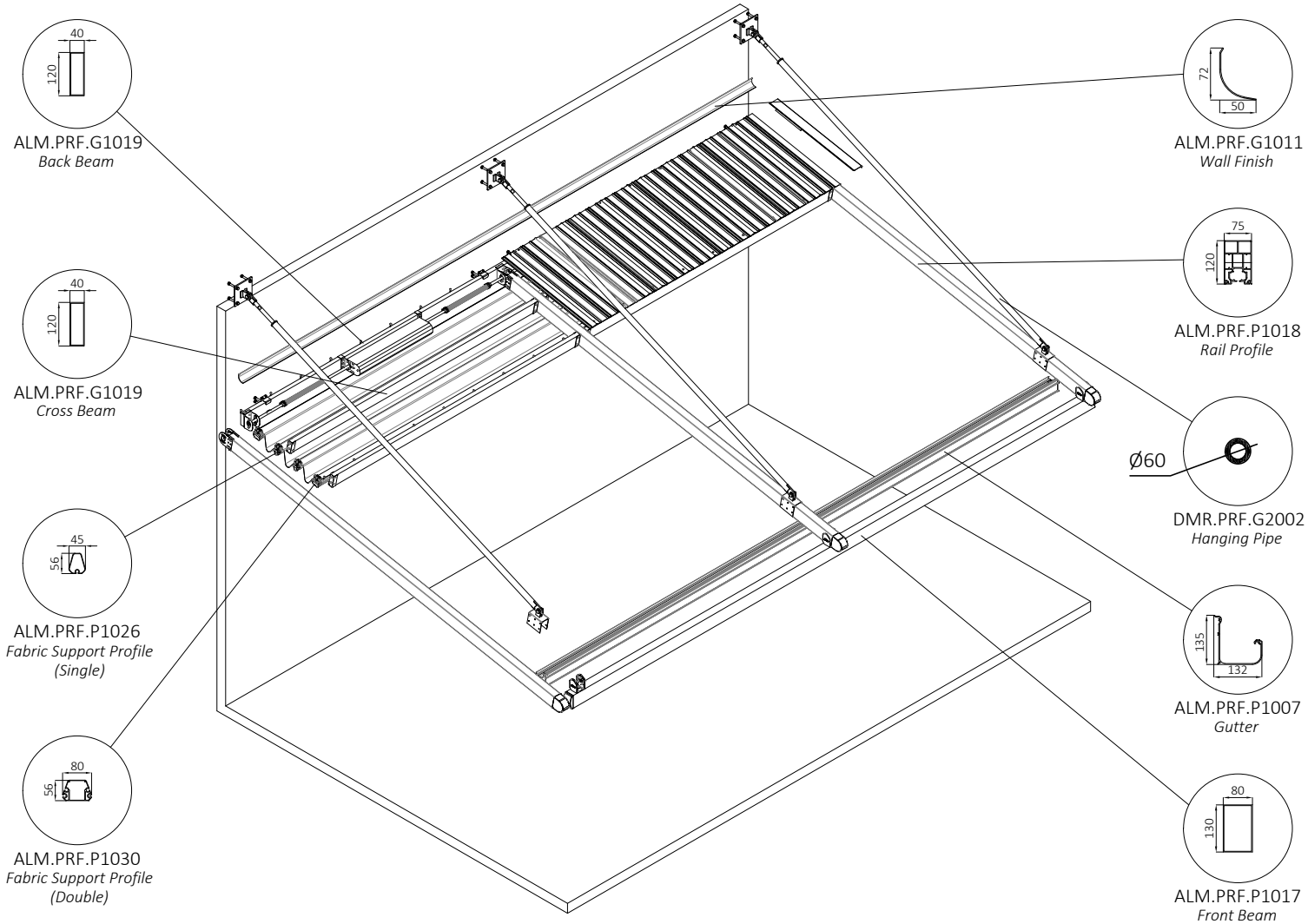

TECHNICAL FEATURES

COLLECTED FABRIC DIMENSIONS

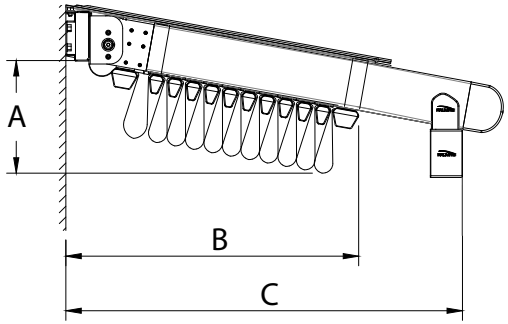

Projection cm

No of Fabric Support Profiles	185	235	284	334	383	433	482	532	581	C
4	34									61
5		35								68
6			36							74
7				37						81
8					38					87
9						39				94
10							40			100
11								41		107
13									43	120
					A					B

*Calculated according to a slope of 15%

MINIMUM SLOPE CHART

Projection	Slope										
	6,4-7,9%	7,4-8,8%	8,4-9,7%	9,4-10,8%	10,4-12%	11,2-12,7%	12-13,4%	13-14,5%	14-15,7%	15-16,6%	16-17,6%
	Rail Center										
	200	**225**	**250**	**275**	**300**	**325**	**350**	**375**	**400**	**425**	**450**
250	11	14	16	19	21	23	25	28	30	33	35
300	15	18	21	24	26	29	32	35	37	40	43
350	18	22	25	29	32	35	38	41	44	48	51
400	22	26	30	34	37	41	44	48	52	56	59
450	27	31	35	39	43	47	51	55	59	64	68
500	31	36	40	45	49	54	58	63	67	72	76
550	35	40	45	50	55	60	65	70	75	80	85
600	39	45	50	56	61	67	72	78	83	89	94

For back height of system 25 cm should be added to slope value.

*Note: Max. slope can be up to 25%

DRAINAGE CALCULATION

Type	Max. m²
COMPACT	30 m²/pc

* per drainage

There should be at least one drainage, each 8 m length gutter.

WIND RESISTANCE

WIDTH (cm)

PROJECTION (cm)	450	500	550	600	650	700	750	800	850	900	950	1000	1050	1100	1150	1200	1250	1300
400	10	10	10	9	9	9	8	8	8	7	9	9	9	8	8	8	8	7
450	10	9	8	8	8	8	7	7	7	7	8	8	8	7	7	7	7	7
500	9	8	7	7	7	7	6	6	6	6	7	7	7	6	6	6	6	6
550	8	7	7	7	7	6	6	6	6	6	7	6	6	6	6	6	6	6
600	7	6	6	6	6	5	5	5	5	5	6	5	5	5	5	5	5	5

All sides open

*The values are given according to the Beaufort scale.

**Calculated for Products with a front height of 250 cm according to Eurocode EN 1991-1-4 Terrain Category 4.

*** You can ask for new calculations for special designs.

PANORAMA COMPACT Wall / Ceiling

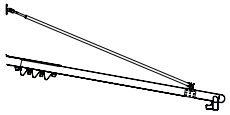

Width

Projection

	2 RAILS					3 RAILS									4 RAILS								FS4 FS10-C	FS9-
	250 cm	300 cm	350 cm	400 cm	450 cm	500 cm	550 cm	600 cm	650 cm	700 cm	750 cm	800 cm	850 cm	900 cm	950 cm	1000 cm	1050 cm	1100 cm	1150 cm	1200 cm	1250 cm	1300 cm		
200 cm	€ 3.948	€ 4.140	€ 4.408	€ 4.683	€ 4.874	€ 5.724	€ 5.910	€ 6.096	€ 6.450	€ 6.606	€ 6.735	€ 6.919	€ 7.103	€ 7.287	€ 8.222	€ 8.403	€ 8.585	€ 8.769	€ 8.951	€ 9.092	€ 9.337	€ 9.620	€ 606	€ 12
250 cm	€ 4.116	€ 4.410	€ 4.672	€ 4.870	€ 5.066	€ 5.997	€ 6.293	€ 6.483	€ 6.743	€ 6.906	€ 7.040	€ 7.331	€ 7.624	€ 7.712	€ 8.614	€ 8.802	€ 9.093	€ 9.281	€ 9.469	€ 9.616	€ 9.868	€ 10.157	€ 669	€ 14
300 cm	€ 4.415	€ 4.743	€ 5.038	€ 5.271	€ 5.501	€ 6.551	€ 6.881	€ 7.107	€ 7.403	€ 7.596	€ 7.766	€ 8.092	€ 8.420	€ 8.544	€ 9.540	€ 9.765	€ 10.090	€ 10.312	€ 10.536	€ 10.711	€ 10.996	€ 11.319	€ 732	€ 17
350 cm	€ 4.686	€ 4.922	€ 5.223	€ 5.558	€ 5.794	€ 6.933	€ 7.168	€ 7.502	€ 7.805	€ 8.001	€ 8.179	€ 8.513	€ 8.850	€ 8.975	€ 10.144	€ 10.374	€ 10.605	€ 10.833	€ 11.163	€ 11.343	€ 11.635	€ 11.864	€ 795	€ 20
400 cm	€ 4.860	€ 5.103	€ 5.410	€ 5.751	€ 5.993	€ 7.212	€ 7.454	€ 7.794	€ 8.101	€ 8.305	€ 8.490	€ 8.827	€ 9.170	€ 9.306	€ 10.546	€ 10.783	€ 11.020	€ 11.254	€ 11.591	€ 11.775	€ 12.074	€ 12.309	€ 857	€ 22
450 cm	€ 5.038	€ 5.288	€ 5.601	€ 5.948	€ 6.197	€ 7.500	€ 7.748	€ 8.095	€ 8.409	€ 8.618	€ 8.810	€ 9.153	€ 9.501	€ 9.643	€ 10.958	€ 11.200	€ 11.442	€ 11.684	€ 12.027	€ 12.216	€ 12.521	€ 12.762	€ 920	€ 25
500 cm	€ 5.213	€ 5.468	€ 5.788	€ 6.141	€ 6.396	€ 7.782	€ 8.035	€ 8.389	€ 8.711	€ 8.922	€ 9.120	€ 9.471	€ 9.827	€ 9.973	€ 11.360	€ 11.609	€ 11.858	€ 12.105	€ 12.454	€ 12.647	€ 12.960	€ 13.207	€ 984	€ 27
550 cm	€ 5.387	€ 5.648	€ 5.976	€ 6.334	€ 6.596	€ 8.063	€ 8.321	€ 8.682	€ 9.012	€ 9.226	€ 9.430	€ 9.790	€ 10.152	€ 10.303	€ 11.762	€ 12.018	€ 12.274	€ 12.526	€ 12.881	€ 13.079	€ 13.399	€ 13.651	€ 1.047	€ 30
600 cm	€ 5.561	€ 5.828	€ 6.163	€ 6.528	€ 6.795	€ 8.345	€ 8.607	€ 8.975	€ 9.314	€ 9.530	€ 9.740	€ 10.108	€ 10.478	€ 10.634	€ 12.163	€ 12.427	€ 12.690	€ 12.947	€ 13.308	€ 13.511	€ 13.837	€ 14.096	€ 1.110	€ 32

FS3	€ 149	€ 156	€ 170	€ 187	€ 203	€ 218	€ 234	€ 249	€ 265	€ 280	€ 360	€ 376	€ 391	€ 407	€ 423	€ 439	€ 454	€ 470	€ 485	€ 501	€ 516	€ 532
FS5-A	€ 27	€ 35	€ 41	€ 46	€ 54	€ 60	€ 67	€ 73	€ 80	€ 86	€ 93	€ 99	€ 106	€ 112	€ 119	€ 125	€ 132	€ 138	€ 145	€ 151	€ 159	€ 165
FS5-E	€ 38	€ 48	€ 56	€ 64	€ 74	€ 82	€ 92	€ 100	€ 110	€ 118	€ 128	€ 136	€ 146	€ 154	€ 164	€ 172	€ 182	€ 190	€ 200	€ 209	€ 218	€ 227

FS3	Gutter System
FS5-A	Additional Fabric Support Profile (Standard)
FS5-E	Additional Fabric Support Profile (3 Axis)
FS4	Additional Rail for COMPACT Series - Al. - 75x120mm
FS8	Lighting System
FS9-C	Side Beam for COMPACT Series - Al. - 80x130mm

		LED TYPE & MODULE		
FS8		2 LED	3 LED	4 LED
FS8-S	SPOT	€ 125	€ 152	€ 179
FS8-L	LINEAR	€ 179	€ 233	-
FS8-E	3 AXIS	€ 206	€ 268	-

* FS9 Side Beam is not included in the price
* FS Flexy Plain/3D or Stam 6002 is included in the price
* Motor and Remote control is included in the price
* RAL Colours specified in Aluminium coating catalogue are included in price. Any other RAL colours which are existing in our Supplier's stock can be applied without extra cost.
* Standard colours are RAL9010, RAL7040, RAL1013, RAL7046, RAL9004, RAL3022, RAL120-2, RAL7036, RAL8019, RAL120-5, RAL8025, RAL4001, RAL620-3, RAL5008
* Painting cost has to be min. 125€
* Plastic parts coloured only specified colours

DEDUCTIONS

Price deduction can apply only front pillars, back pillars and side beam. The price of the front pillar, back pillar and side beam can be deducted from options price.

OPTIONS

FS11	Deco ceiling cover	€ 46	m^2
FS12	Izo-Pro ceiling cover (up to 800 cm width)	€ 39	m^2
FS15-C	Side beam pillar (80x80mm - Al)	€ 246	pcs
FS16	Wood effect (*Price difference for standart patterns (up to 700cm projection) (*Can not be applied to steel construction or freestanding products with base plate.)	10% of product price	
FS19	Fix louver	€ 46	lm
FS24	W96 Ceiling Cover	€ 53	m^2
FS25	Fabric support profile special color	€ 11	m^2
FS26	Exclusive fabric difference	€ 31	m^2
FS27	3 Axis lighting fabric support profile difference	€ 9	m^2
FS28-1	Stainless steel chain - 100 cm	€ 46	1m
FS28-2	Stainless steel chain - 200 cm	€ 89	2m
FS28-3	Stainless steel chain - 300 cm	€ 134	3m
FS28-4	Stainless steel chain - 400 cm	€ 179	4m
FS29-1	Sun Sensor (SUNIS) (with Universal Receiver, it's included in the price)	€ 596	pcs
FS29-2	Wind Sensor (EOLIS RTS) (with Universal Receiver, it's included in the price)	€ 367	pcs
FS29-3	Sun and Wind Sensor (SOLIRIS) (with Universal Receiver, it's included in the price)	€ 459	pcs
FS30	CONNEXOON	€246	pcs
FS31-1	Remote Control - PURE - Telis 1	€55	pcs
FS31-4	Remote Control - PURE - Telis 4	€93	pcs
FS31-16	Remote Control - PURE - Telis 16	€264	pcs
FS32-1	Remote Control - PATIO - Telis 1	€76	pcs
FS32-4	Remote Control - PATIO - Telis 4	€123	pcs
FS33-1	Remote Control - LOUNGE - Telis 1	€93	pcs
FS33-4	Remote Control - LOUNGE - Telis 4	€133	pcs
FS34-1	Remote Control - MODULIS PURE - Telis 1	€125	pcs
FS34-4	Remote Control - MODULIS PURE - Telis 4	€192	pcs
FS35-1	Remote Control - MODULIS LOUNGE - Telis 1	€144	pcs
FS35-4	Remote Control - MODULIS LOUNGE - Telis 4	€220	pcs

*** Can't apply a sensor to the single motor product. For further information please contact with PALMIYE**

EXTENSIONS

Rail	COMPACT - 75x120mm	€ 128	lm
Beam	Al. 40x120mm	€ 42	lm
Beam	Al. 42x150mm	€ 65	lm
Beam	Al. 50x150mm	€ 115	lm
Beam	Al. 80x130mm	€ 61	lm
Beam	Al. 100x150mm	€ 96	lm
Beam	St. 100x150x3mm	€ 190	lm
Beam	St. 100x150x5mm	€ 246	lm
Beam	St. 100x200x3mm	€ 193	lm
Beam	St. 100x200x5mm	€ 293	lm
Fabric protection cover	Al. - 63x___cm	€ 37	m^2
Gutter	Special Profile	€ 28	lm

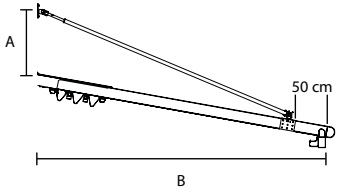

STANDARD "A" VALUES

B (cm)	350	400	450	500	550	600
A (cm)	50	60	70	80	90	100

PRICE DIFFERENCE

BEAM GROUP

	Standard	Al. 40x120mm		
Back Beam	to	Al. 42x150mm	€ 24	lm
		Al. 50x150mm	€ 74	lm
		Al. 80x130mm	€ 19	lm
		St. 50x150x3mm	€ 86	lm
		St. 50x150x5mm	€ 146	lm
		Al. 100x150mm	€ 54	lm
		St. 100x150x3mm	€ 149	lm
		St. 100x150x5mm	€ 205	lm
		St. 100x200x3mm	€ 152	lm
		St. 100x200x5mm	€ 251	lm

	Standard	Al. 80x130mm		
Front Beam	to	Al. 100x150mm	€ 35	lm
		St. 100x150x3mm	€ 130	lm
		St. 100x150x5mm	€ 186	lm
		St. 100x200x3mm	€ 133	lm
		St. 100x200x5mm	€ 233	lm

PANORAMA

COMPACT
Freestanding

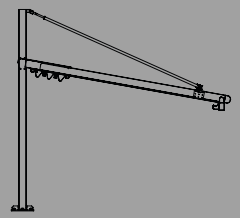

MAXIMUM DIMENSIONS

	WIDTH	PROJECTION
2 RAILS	450 cm	600 cm
3 RAILS	900 cm	600 cm
4 RAILS	1300 cm	600 cm

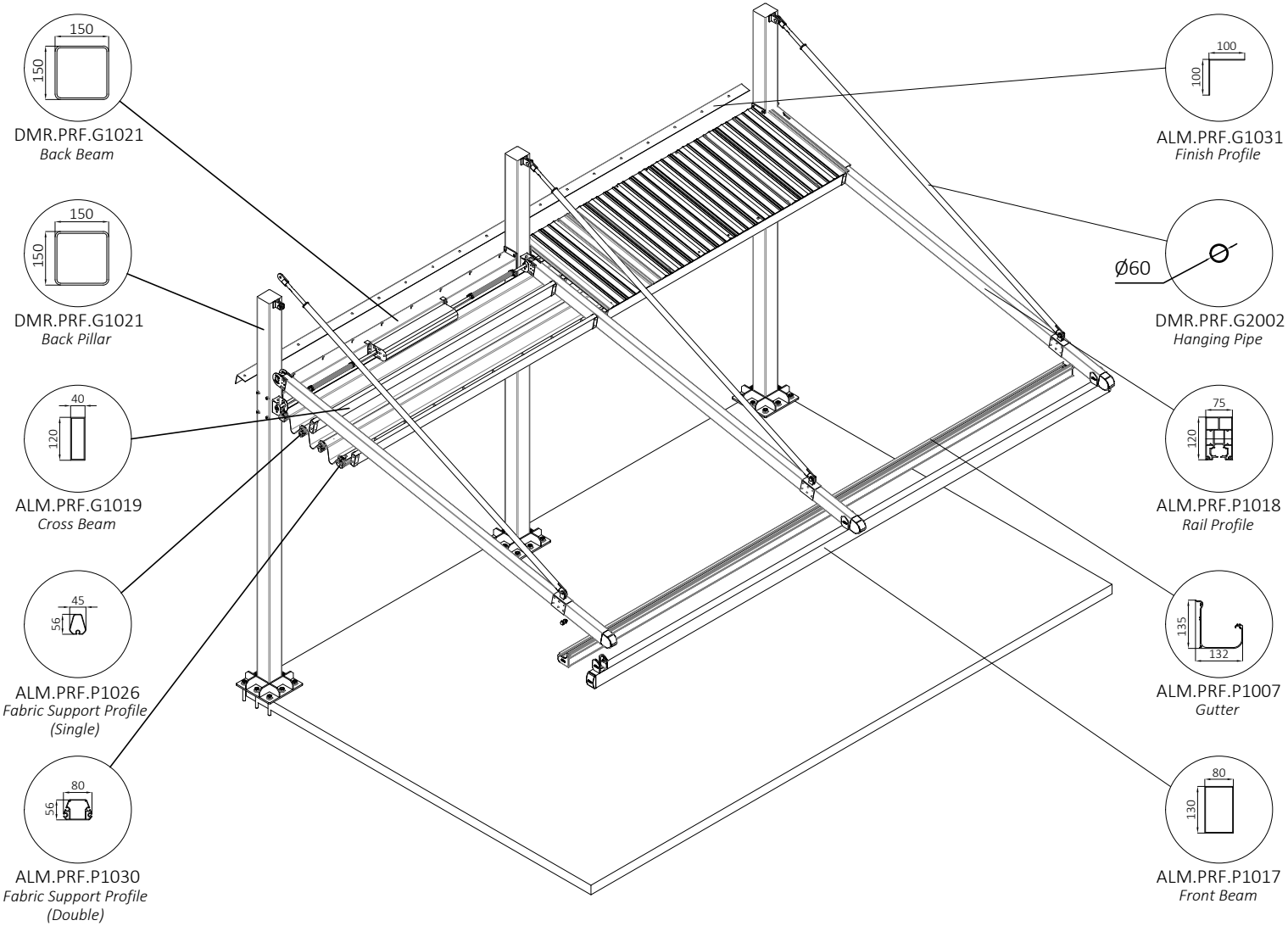

TECHNICAL FEATURES

COLLECTED FABRIC DIMENSIONS

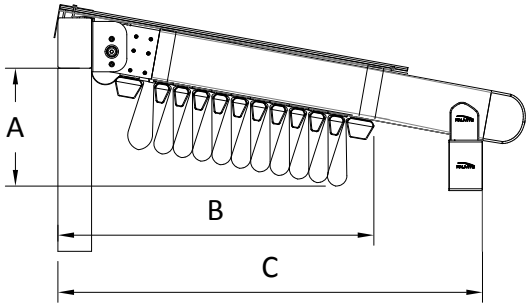

Projection cm

No of Fabric Support Profiles	185	235	284	334	383	433	482	532	581	C
4	34									61
5		35								68
6			36							74
7				37						81
8					38					87
9						39				94
10							40			100
11								41		107
13									43	120
					A					B

*Calculated according to a slope of 15%

DRAINAGE CALCULATION

Type	Max. m²
COMPACT	30 m²/pc

* per drainage

There should be at least one drainage, each 8 m length gutter.

MINIMUM SLOPE CHART

Projection	Slope										
	6,4-7,9%	7,4-8,8%	8,4-9,7%	9,4-10,8%	10,4-12%	11,2-12,7%	12-13,4%	13-14,5%	14-15,7%	15-16,6%	16-17,6%
	Rail Center										
	200	**225**	**250**	**275**	**300**	**325**	**350**	**375**	**400**	**425**	**450**
250	16	19	21	24	26	28	30	33	35	38	40
300	20	23	26	29	31	34	37	40	42	45	48
350	23	27	30	34	37	40	43	46	49	53	56
400	27	31	35	39	42	46	49	53	57	61	64
450	32	36	40	44	48	52	56	60	64	69	73
500	36	41	45	50	54	59	63	68	72	77	81
550	40	45	50	55	60	65	70	75	80	85	90
600	44	50	55	61	66	72	77	83	88	94	99

For back height of system 25 cm should be added to slope value.

*Note: Max. slope can be up to 25%

WIND RESISTANCE

WIDTH (cm)

PROJECTION (cm)	**450**	**500**	**550**	**600**	**650**	**700**	**750**	**800**	**850**	**900**	**950**	**1000**	**1050**	**1100**	**1150**	**1200**	**1250**	**1300**
400	10	10	10	9	9	9	9	8	8	8	9	9	9	9	8	8	8	8
450	9	9	9	8	8	8	8	7	7	7	8	8	8	8	7	7	7	7
500	8	8	8	8	8	7	7	7	7	6	8	7	7	7	7	7	7	6
550	8	8	7	7	7	7	6	6	6	6	7	7	7	6	6	6	6	6
600	7	7	7	6	6	6	6	6	5	5	6	6	6	6	6	6	5	5

All sides open

*The values are given according to the Beaufort scale.

**Calculated for Products with a front height of 250 cm according to Eurocode EN 1991-1-4 Terrain Category 4.

*** You can ask for new calculations for special designs.

PANORAMA COMPACT Freestanding

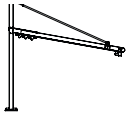

Width

	2 RAILS					3 RAILS									4 RAILS								FS4 FS10-C	FS9-C
	250 cm	300 cm	350 cm	400 cm	450 cm	500 cm	550 cm	600 cm	650 cm	700 cm	750 cm	800 cm	850 cm	900 cm	950 cm	1000 cm	1050 cm	1100 cm	1150 cm	1200 cm	1250 cm	1300 cm		
200 cm	€ 4.869	€ 5.061	€ 5.329	€ 5.604	€ 5.795	€ 7.106	€ 7.292	€ 7.478	€ 7.832	€ 7.988	€ 8.117	€ 8.300	€ 8.485	€ 8.669	€ 10.064	€ 10.245	€ 10.428	€ 10.611	€ 10.794	€ 10.935	€ 11.179	€ 11.463	€ 606	€ 124
250 cm	€ 5.037	€ 5.331	€ 5.594	€ 5.792	€ 5.987	€ 7.379	€ 7.675	€ 7.865	€ 8.125	€ 8.287	€ 8.422	€ 8.713	€ 9.006	€ 9.093	€ 10.456	€ 10.645	€ 10.936	€ 11.123	€ 11.311	€ 11.458	€ 11.711	€ 11.999	€ 669	€ 149
300 cm	€ 5.336	€ 5.664	€ 5.960	€ 6.192	€ 6.422	€ 7.933	€ 8.262	€ 8.489	€ 8.784	€ 8.978	€ 9.148	€ 9.474	€ 9.801	€ 9.925	€ 11.383	€ 11.607	€ 11.932	€ 12.154	€ 12.378	€ 12.554	€ 12.839	€ 13.162	€ 732	€ 175
350 cm	€ 5.607	€ 5.843	€ 6.144	€ 6.479	€ 6.716	€ 8.315	€ 8.550	€ 8.883	€ 9.186	€ 9.383	€ 9.561	€ 9.894	€ 10.232	€ 10.357	€ 11.986	€ 12.216	€ 12.447	€ 12.675	€ 13.005	€ 13.185	€ 13.478	€ 13.707	€ 795	€ 200
400 cm	€ 5.781	€ 6.024	€ 6.332	€ 6.673	€ 6.915	€ 8.594	€ 8.836	€ 9.176	€ 9.483	€ 9.687	€ 9.872	€ 10.209	€ 10.551	€ 10.687	€ 12.388	€ 12.625	€ 12.862	€ 13.096	€ 13.433	€ 13.617	€ 13.916	€ 14.151	€ 857	€ 227
450 cm	€ 5.960	€ 6.209	€ 6.522	€ 6.869	€ 7.119	€ 8.882	€ 9.130	€ 9.477	€ 9.791	€ 9.999	€ 10.191	€ 10.535	€ 10.883	€ 11.025	€ 12.800	€ 13.042	€ 13.284	€ 13.526	€ 13.870	€ 14.058	€ 14.363	€ 14.604	€ 920	€ 252
500 cm	€ 6.134	€ 6.389	€ 6.710	€ 7.062	€ 7.318	€ 9.164	€ 9.416	€ 9.770	€ 10.092	€ 10.303	€ 10.501	€ 10.853	€ 11.208	€ 11.355	€ 13.202	€ 13.451	€ 13.701	€ 13.947	€ 14.297	€ 14.490	€ 14.802	€ 15.049	€ 984	€ 278
550 cm	€ 6.308	€ 6.569	€ 6.897	€ 7.256	€ 7.517	€ 9.445	€ 9.703	€ 10.064	€ 10.394	€ 10.607	€ 10.811	€ 11.171	€ 11.534	€ 11.685	€ 13.604	€ 13.860	€ 14.117	€ 14.368	€ 14.724	€ 14.921	€ 15.241	€ 15.494	€ 1.047	€ 303
600 cm	€ 6.482	€ 6.749	€ 7.084	€ 7.449	€ 7.716	€ 9.726	€ 9.989	€ 10.357	€ 10.696	€ 10.911	€ 11.121	€ 11.490	€ 11.859	€ 12.016	€ 14.006	€ 14.269	€ 14.533	€ 14.789	€ 15.150	€ 15.353	€ 15.680	€ 15.938	€ 1.110	€ 329

FS3	€ 149	€ 156	€ 170	€ 187	€ 203	€ 218	€ 234	€ 249	€ 265	€ 280	€ 360	€ 376	€ 391	€ 407	€ 423	€ 439	€ 454	€ 470	€ 485	€ 501	€ 516	€ 532
FS5-A	€ 27	€ 35	€ 41	€ 46	€ 54	€ 60	€ 67	€ 73	€ 80	€ 86	€ 93	€ 99	€ 106	€ 112	€ 119	€ 125	€ 132	€ 138	€ 145	€ 151	€ 159	€ 165
FS5-E	€ 38	€ 48	€ 56	€ 64	€ 74	€ 82	€ 92	€ 100	€ 110	€ 118	€ 128	€ 136	€ 146	€ 154	€ 164	€ 172	€ 182	€ 190	€ 200	€ 209	€ 218	€ 227

FS3	Gutter System
FS5-A	Additional Fabric Support Profile (Standard)
FS5-E	Additional Fabric Support Profile (3 Axis)
FS4	Additional Rail for COMPACT Series - Al. - 75x120mm
FS8	Lighting System
FS9-C	Side Beam for COMPACT Series - Al. - 80x130mm

FS8		LED TYPE & MODULE		
		2 LED	3 LED	4 LED
FS8-S	SPOT	€ 125	€ 152	€ 179
FS8-L	LINEAR	€ 179	€ 233	-
FS8-E	3 AXIS	€ 206	€ 268	-

* FS9 Side Beam is not included in the price
* FS Flexy Plain/3D or Stam 6002 is included in the price
* Motor and Remote control is included in the price
* RAL Colours specified in Aluminium coating catalogue are included in price. Any other RAL colours which are existing in our Supplier's stock can be applied without extra cost.
* Standard colours are RAL9010, RAL7040, RAL1013, RAL7046, RAL9004, RAL3022, RAL120-2, RAL7036, RAL8019, RAL120-5, RAL8025, RAL4001, RAL620-3, RAL5008
* Painting cost has to be min. 125€
* Plastic parts coloured only specified colours

DEDUCTIONS

Price deduction can apply only front pillars, back pillars and side beam. The price of the front pillar, back pillar and side beam can be deducted from options price.

OPTIONS

FS10-150ST3	Extra pillar (150x150x3mm St.)	€ 748	pcs
FS10-150ST5	Extra pillar (150x150x5mm St.)	€ 1.116	pcs
FS11	Deco ceiling cover	€ 46	m^2
FS12	Izo-Pro ceiling cover (up to 800 cm width)	€ 39	m^2
FS15-C	Side beam pillar (80x80mm - Al)	€ 246	pcs
FS16	Wood effect (*Price difference for standart patterns (up to 700cm projection) (*Can not be applied to steel construction or freestanding products with base plate.)	10% of product price	
FS19	Fix louver	€ 46	lm
FS24	W96 Ceiling Cover	€ 53	m^2
FS25	Fabric support profile special color	€ 11	m^2
FS26	Exclusive fabric difference	€ 31	m^2
FS27	3 Axis lighting fabric support profile difference	€ 9	m^2
FS28-1	Stainless steel chain - 100 cm	€ 46	1m
FS28-2	Stainless steel chain - 200 cm	€ 89	2m
FS28-3	Stainless steel chain - 300 cm	€ 134	3m
FS28-4	Stainless steel chain - 400 cm	€ 179	4m
FS29-1	Sun Sensor (SUNIS) (with Universal Receiver, it's included in the price)	€ 596	pcs
FS29-2	Wind Sensor (EOLIS RTS) (with Universal Receiver, it's included in the price)	€ 367	pcs
FS29-3	Sun and Wind Sensor (SOLIRIS) (with Universal Receiver, it's included in the price)	€ 459	pcs
FS30	CONNEXOON	€246	pcs
FS31-1	Remote Control - PURE - Telis 1	€55	pcs
FS31-4	Remote Control - PURE - Telis 4	€93	pcs
FS31-16	Remote Control - PURE - Telis 16	€264	pcs
FS32-1	Remote Control - PATIO - Telis 1	€76	pcs
FS32-4	Remote Control - PATIO - Telis 4	€123	pcs
FS33-1	Remote Control - LOUNGE - Telis 1	€93	pcs
FS33-4	Remote Control - LOUNGE - Telis 4	€133	pcs
FS34-1	Remote Control - MODULIS PURE - Telis 1	€125	pcs
FS34-4	Remote Control - MODULIS PURE - Telis 4	€192	pcs
FS35-1	Remote Control - MODULIS LOUNGE - Telis 1	€144	pcs
FS35-4	Remote Control - MODULIS LOUNGE - Telis 4	€220	pcs

*** Can't apply a sensor to the single motor product. For further information please contact with PALMIYE**

EXTENSIONS

Rail	COMPACT - 75x120mm	€ 128	lm
Beam	Al. 80x130mm	€ 61	lm
Beam	Al. 100x150mm	€ 96	lm
Beam	St. 100x150x3mm	€ 190	lm
Beam	St. 100x150x5mm	€ 246	lm
Beam	St. 100x200x3mm	€ 193	lm
Beam	St. 100x200x5mm	€ 293	lm
Fabric protection cover	Al. - 63x___cm	€ 37	m^2
Gutter	Special Profile	€ 28	lm
Pillar	St. 150x150x3mm	€ 261	lm
Pillar	St. 150x150x5mm	€ 390	lm

PRICE DIFFERENCE

BEAM GROUP

Back Beam

Standard	St. 150x150x3mm		
to	St. 150x150x5mm	€ 95	lm

Front Beam

Standard	Al. 80x130mm		
to	Al. 100x150mm	€ 35	lm
	St. 100x150x3mm	€ 130	lm
	St. 100x150x5mm	€ 186	lm
	St. 100x200x3mm	€ 133	lm
	St. 100x200x5mm	€ 233	lm

PILLAR GROUP

Front Pillar

Standard	St. 150x150x3mm		
to	St.150x150x5mm	367€	lm

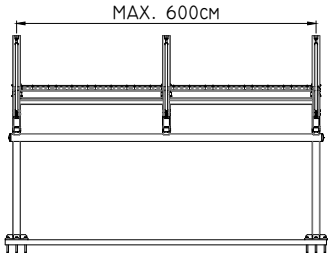

- The product produces as 3 mm steel beam and pillar.
- The front beam can't produces as a steel.
- With pillar reduction applications, Back Half Pillar must be installed at the back of each rail shaft.
- In standard applications 1 back pillar St. 150x150x3mm should be added to each rail shaft.
- When pillar reduction is applied, steel pillars should be 150x150x5 mm.
- Ground flanges are 380x380x15 mm

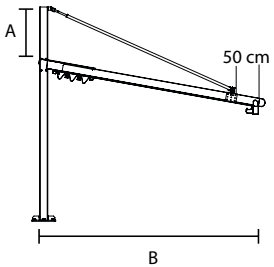

- Max. pillar length: 480 cm

STANDARD "A" VALUES

B (cm)	350	400	450	500	550	600
A (cm)	50	60	70	80	90	100

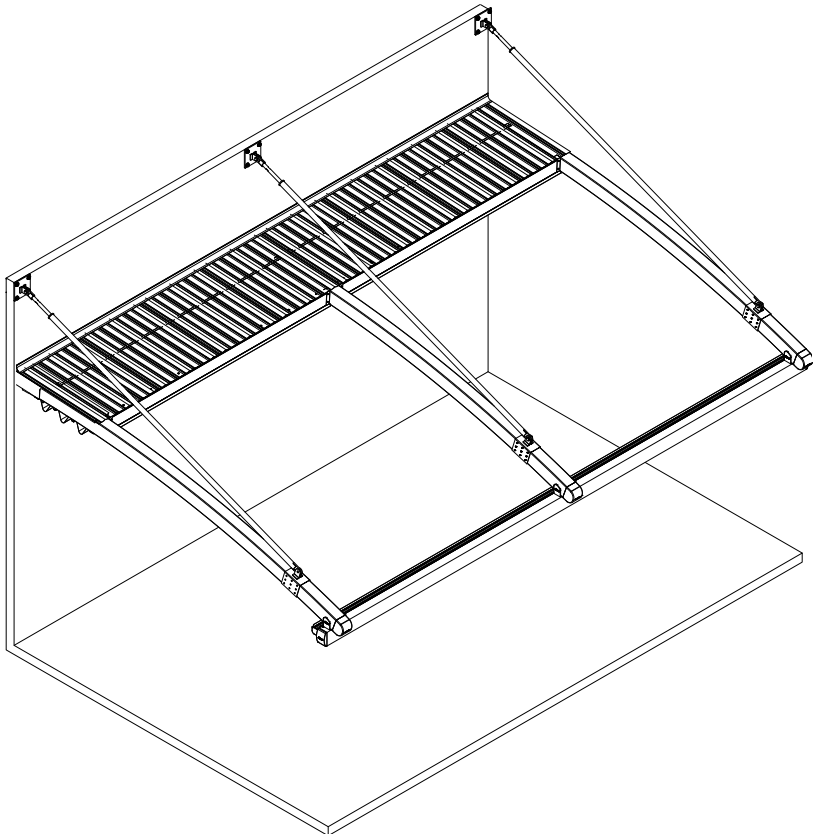

APOLLO

I N D E X

PRODUCT FORMS

- **APOLLO PLUS** Wall / Ceiling Installation - Suspended

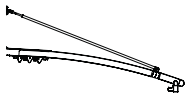

- **APOLLO PLUS** Freestanding - Suspended

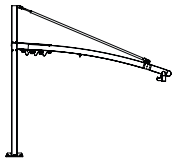

- **APOLLO PLUS** Wall / Ceiling Installation - Buttress

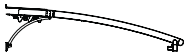

- **APOLLO PLUS** Freestanding - Buttress

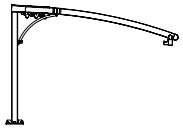

- **APOLLO COMPACT** Wall / Ceiling - Suspended

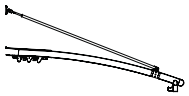

- **APOLLO COMPACT** Freestanding - Suspended

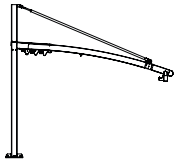

APOLLO

PLUS
Wall / Ceiling

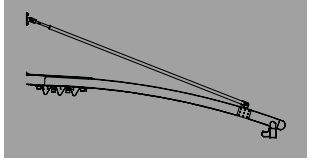

MAXIMUM DIMENSIONS

	WIDTH	PROJECTION
2 RAILS	400 cm	600 cm
3 RAILS	800 cm	600 cm
4 RAILS	1200 cm	600 cm
5 RAILS	1300 cm	600 cm

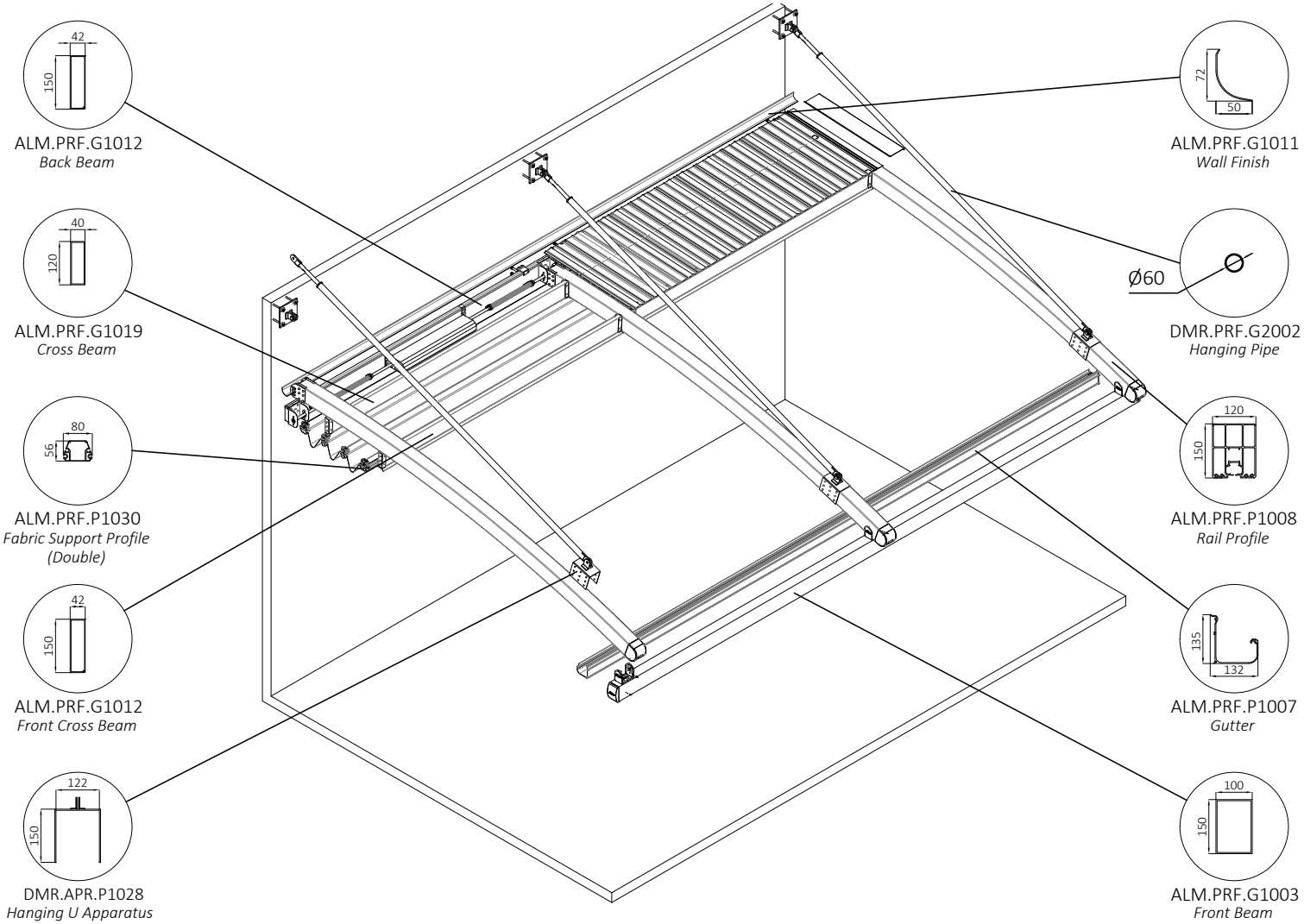

TECHNICAL FEATURES

COLLECTED FABRIC DIMENSIONS

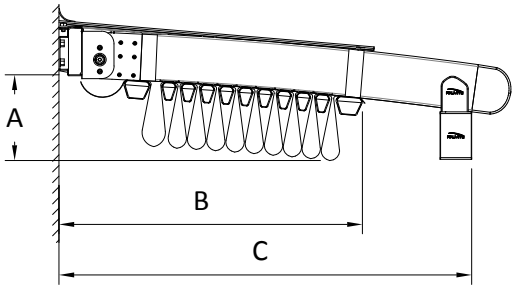

Projection cm

No of Fabric Support Profiles	200	250	300	350	400	450	500	550	600	C
5	30									68
6		31								74
7			32							81
9				34						94
10					35					100
11						36				107
13							38			120
14								39		126
15									40	133
				A						B

*Calculated according to a slope of 15%

DRAINAGE CALCULATION

Type	Max. m²
Full	39 m²/pc
Half	18 m²/pc

* per drainage

There should be at least one drainage, each 8 m length gutter.

RADIUS CHART

RADIUS	850	1500	2850

B	A		
250	63		
300	83		
350	107		
400	135	82	
450	168	98	
500		116	
550		137	
600		160	93

B

*The values are approx. ± 5 cm

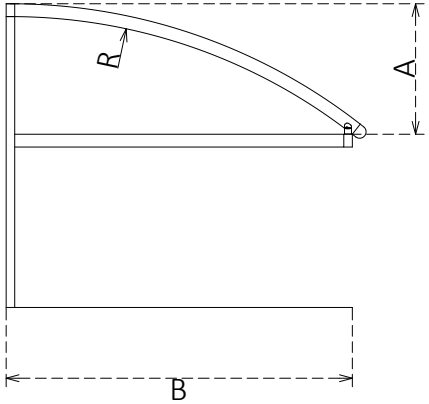

WIND RESISTANCE

WIDTH (cm)

PROJECTION (cm)	450	500	550	600	650	700	750	800	850	900	950	1000	1050	1100	1150	1200	1250	1300
400	10	10	10	9	9	9	8	8	8	7	9	9	9	8	8	8	8	7
450	10	9	8	8	8	8	7	7	7	7	8	8	8	7	7	7	7	7
500	9	8	7	7	7	7	6	6	6	6	7	7	7	6	6	6	6	6
550	8	7	7	7	7	6	6	6	6	6	7	6	6	6	6	6	6	6
600	7	6	6	6	6	5	5	5	5	5	6	5	5	5	5	5	5	5

All sides open

*The values are given according to the Beaufort scale.

**Calculated for Products with a front height of 250 cm according to Eurocode EN 1991-1-4 Terrain Category 4.

*** You can ask for new calculations for special designs.

APOLLO PLUS Wall / Ceiling

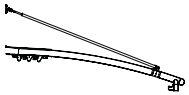

Width

	2 RAILS				3 RAILS								4 RAILS								5 RAILS		FS4	FS9	FS9-S
	250 cm	300 cm	350 cm	400 cm	450 cm	500 cm	550 cm	600 cm	650 cm	700 cm	750 cm	800 cm	850 cm	900 cm	950 cm	1000 cm	1050 cm	1100 cm	1150 cm	1200 cm	1250 cm	1300 cm			
200 cm	€ 5.333	€ 5.598	€ 6.107	€ 6.375	€ 7.530	€ 7.794	€ 8.062	€ 8.326	€ 8.836	€ 9.103	€ 9.415	€ 9.679	€ 10.603	€ 10.860	€ 11.359	€ 11.615	€ 11.869	€ 12.125	€ 12.378	€ 12.634	€ 14.106	€ 14.505	€ 734	€ 150	€ 199
250 cm	€ 5.619	€ 6.026	€ 6.411	€ 6.686	€ 7.962	€ 8.234	€ 8.649	€ 8.919	€ 9.304	€ 9.576	€ 9.898	€ 10.309	€ 11.350	€ 11.619	€ 11.989	€ 12.253	€ 12.657	€ 12.920	€ 13.184	€ 13.449	€ 15.040	€ 15.447	€ 811	€ 181	€ 249
300 cm	€ 6.061	€ 6.516	€ 6.941	€ 7.256	€ 8.690	€ 9.006	€ 9.461	€ 9.777	€ 10.201	€ 10.517	€ 10.879	€ 11.335	€ 12.534	€ 12.838	€ 13.257	€ 13.561	€ 14.004	€ 14.308	€ 14.617	€ 14.925	€ 16.670	€ 17.122	€ 887	€ 212	€ 299
350 cm	€ 6.493	€ 6.820	€ 7.252	€ 7.715	€ 9.273	€ 9.596	€ 9.922	€ 10.385	€ 10.821	€ 11.144	€ 11.517	€ 11.980	€ 13.303	€ 13.619	€ 14.176	€ 14.495	€ 14.811	€ 15.126	€ 15.577	€ 15.893	€ 17.763	€ 18.089	€ 963	€ 243	€ 349
400 cm	€ 6.790	€ 7.124	€ 7.567	€ 8.037	€ 9.720	€ 10.054	€ 10.392	€ 10.860	€ 11.305	€ 11.639	€ 12.019	€ 12.489	€ 13.941	€ 14.264	€ 14.833	€ 15.158	€ 15.485	€ 15.808	€ 16.271	€ 16.593	€ 18.592	€ 18.926	€ 1.040	€ 274	€ 399
450 cm	€ 7.094	€ 7.438	€ 7.890	€ 8.371	€ 10.178	€ 10.523	€ 10.867	€ 11.344	€ 11.800	€ 12.141	€ 12.533	€ 13.013	€ 14.586	€ 14.920	€ 15.499	€ 15.833	€ 16.167	€ 16.501	€ 16.971	€ 17.304	€ 19.428	€ 19.769	€ 1.116	€ 305	€ 449
500 cm	€ 7.393	€ 7.745	€ 8.207	€ 8.695	€ 10.631	€ 10.983	€ 11.336	€ 11.824	€ 12.285	€ 12.638	€ 13.037	€ 13.525	€ 15.230	€ 15.571	€ 16.159	€ 16.503	€ 16.844	€ 17.185	€ 17.666	€ 18.010	€ 20.259	€ 20.611	€ 1.192	€ 336	€ 499
550 cm	€ 7.692	€ 8.051	€ 8.525	€ 9.019	€ 11.084	€ 11.443	€ 11.805	€ 12.303	€ 12.770	€ 13.135	€ 13.542	€ 14.036	€ 15.874	€ 16.222	€ 16.818	€ 17.173	€ 17.521	€ 17.870	€ 18.361	€ 18.716	€ 21.090	€ 21.452	€ 1.269	€ 367	€ 549
600 cm	€ 7.992	€ 8.358	€ 8.842	€ 9.344	€ 11.537	€ 11.903	€ 12.273	€ 12.782	€ 13.256	€ 13.632	€ 14.046	€ 14.548	€ 16.518	€ 16.873	€ 17.477	€ 17.843	€ 18.199	€ 18.554	€ 19.056	€ 19.422	€ 21.921	€ 22.294	€ 1.345	€ 398	€ 598

FS3	€ 149	€ 156	€ 170	€ 187	€ 203	€ 218	€ 234	€ 249	€ 265	€ 280	€ 360	€ 376	€ 391	€ 407	€ 423	€ 439	€ 454	€ 470	€ 485	€ 501	€ 516	€ 532
FS5-A	€ 27	€ 35	€ 41	€ 46	€ 54	€ 60	€ 67	€ 73	€ 80	€ 86	€ 93	€ 99	€ 106	€ 112	€ 119	€ 125	€ 132	€ 138	€ 145	€ 151	€ 159	€ 165
FS5-E	€ 38	€ 48	€ 56	€ 64	€ 74	€ 82	€ 92	€ 100	€ 110	€ 118	€ 128	€ 136	€ 146	€ 154	€ 164	€ 172	€ 182	€ 190	€ 200	€ 209	€ 218	€ 227

FS3	Gutter System
FS5-A	Additional Fabric Support Profile (Standard)
FS5-E	Additional Fabric Support Profile (3 Axis)
FS4	Additional Rail for PLUS Series - Al. - 120x150mm
FS8	Lighting System
FS9	Side Beam for PLUS Series - Al. - 50x150mm
FS9-S	Side Beam for PLUS Series - Al. - 100x150mm (Special)

FS8		LED TYPE & MODULE		
		2 LED	3 LED	4 LED
FS8-S	SPOT	€ 125	€ 152	€ 179
FS8-L	LINEAR	€ 179	€ 233	-
FS8-E	3 AXIS	€ 206	€ 268	-

* FS9 Side Beam is not included in the price
* FS Flexy Plain/3D or Stam 6002 is included in the price
* Motor and Remote control is included in the price
* RAL Colours specified in Aluminium coating catalogue are included in price. Any other RAL colours which are existing in our Supplier's stock can be applied without extra cost.
* Standard colours are RAL9010, RAL7040, RAL1013, RAL7046, RAL9004, RAL3022, RAL120-2, RAL7036, RAL8019, RAL120-5, RAL8025, RAL4001, RAL620-3, RAL5008
* Painting cost has to be min. 125€
* Plastic parts coloured only specified colours

DEDUCTIONS

Price deduction can apply only front pillars, back pillars and side beam. The price of the front pillar, back pillar and side beam can be deducted from options price.

OPTIONS

FS11	Deco ceiling cover	€ 46	m^2
FS12	Izo-Pro ceiling cover (up to 800 cm width)	€ 39	m^2
FS15	Side beam pillar (50x100mm - Al)	€ 174	pcs
FS15-B	Side beam pillar (100x100mm - Al)	€ 335	pcs
FS16	Wood effect (*Price difference for standart patterns (up to 700cm projection) (*Can not be applied to steel construction or freestanding products with base plate.)	10% of product price	
FS19	Fix louver	€ 46	lm
FS24	W96 Ceiling Cover	€ 53	m^2
FS25	Fabric support profile special color	€ 11	m^2
FS26	Exclusive fabric difference	€ 31	m^2
FS27	3 Axis lighting fabric support profile difference	€ 9	m^2
FS28-1	Stainless steel chain - 100 cm	€ 46	1m
FS28-2	Stainless steel chain - 200 cm	€ 89	2m
FS28-3	Stainless steel chain - 300 cm	€ 134	3m
FS28-4	Stainless steel chain - 400 cm	€ 179	4m
FS29-1	Sun Sensor (SUNIS) (with Universal Receiver, it's included in the price)	€ 596	pcs
FS29-2	Wind Sensor (EOLIS RTS) (with Universal Receiver, it's included in the price)	€ 367	pcs
FS29-3	Sun and Wind Sensor (SOLIRIS) (with Universal Receiver, it's included in the price)	€ 459	pcs
FS30	CONNEXOON	€246	pcs
FS31-1	Remote Control - PURE - Telis 1	€55	pcs
FS31-4	Remote Control - PURE - Telis 4	€93	pcs
FS31-16	Remote Control - PURE - Telis 16	€264	pcs
FS32-1	Remote Control - PATIO - Telis 1	€76	pcs
FS32-4	Remote Control - PATIO - Telis 4	€123	pcs
FS33-1	Remote Control - LOUNGE - Telis 1	€93	pcs
FS33-4	Remote Control - LOUNGE - Telis 4	€133	pcs
FS34-1	Remote Control - MODULIS PURE - Telis 1	€125	pcs
FS34-4	Remote Control - MODULIS PURE - Telis 4	€192	pcs
FS35-1	Remote Control - MODULIS LOUNGE - Telis 1	€144	pcs
FS35-4	Remote Control - MODULIS LOUNGE - Telis 4	€220	pcs

*** Can't apply a sensor to the single motor product. For further information please contact with PALMIYE**

EXTENSIONS

Rail	PLUS - 120x150mm	€ 209	lm
Beam	Al. 42x150mm	€ 65	lm
Beam	Al. 50x150mm	€ 115	lm
Beam	Al. 100x150mm	€ 96	lm
Beam	St. 100x150x3mm	€ 190	lm
Beam	St. 100x150x5mm	€ 246	lm
Beam	St. 100x200x3mm	€ 193	lm
Beam	St. 100x200x5mm	€ 293	lm
Fabric protection cover	Al. - 63x___cm	€ 37	m^2
Gutter	Special Profile	€ 28	lm

PRICE DIFFERENCE

BEAM GROUP

Back Beam	**Standard**	Al. 42x150mm		
	to	Al. 50x150mm	€ 50	lm
		St. 50x150x3mm	€ 62	lm
		St. 50x150x5mm	€ 122	lm
		Al. 100x150mm	€ 30	lm
		St. 100x150x3mm	€ 125	lm
		St. 100x150x5mm	€ 181	lm
		St. 100x200x3mm	€ 128	lm
		St. 100x200x5mm	€ 228	lm

Front Beam	**Standard**	**Al. 100x150mm**		
	to	St. 100x150x3mm	€ 95	lm
		St. 100x150x5mm	€ 151	lm
		St. 100x200x3mm	€ 98	lm
		St. 100x200x5mm	€ 197	lm

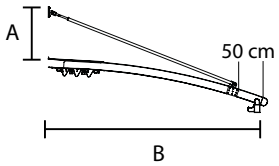

STANDARD "A" VALUES

B (cm)	350	400	450	500	550	600
A (cm)	50	60	70	80	90	100

APOLLO PLUS Freestanding

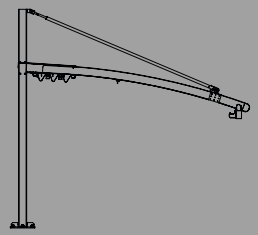

MAXIMUM DIMENSIONS

	WIDTH	PROJECTION
2 RAILS	400 cm	600 cm
3 RAILS	800 cm	600 cm
4 RAILS	1200 cm	600 cm
5 RAILS	1300 cm	600 cm

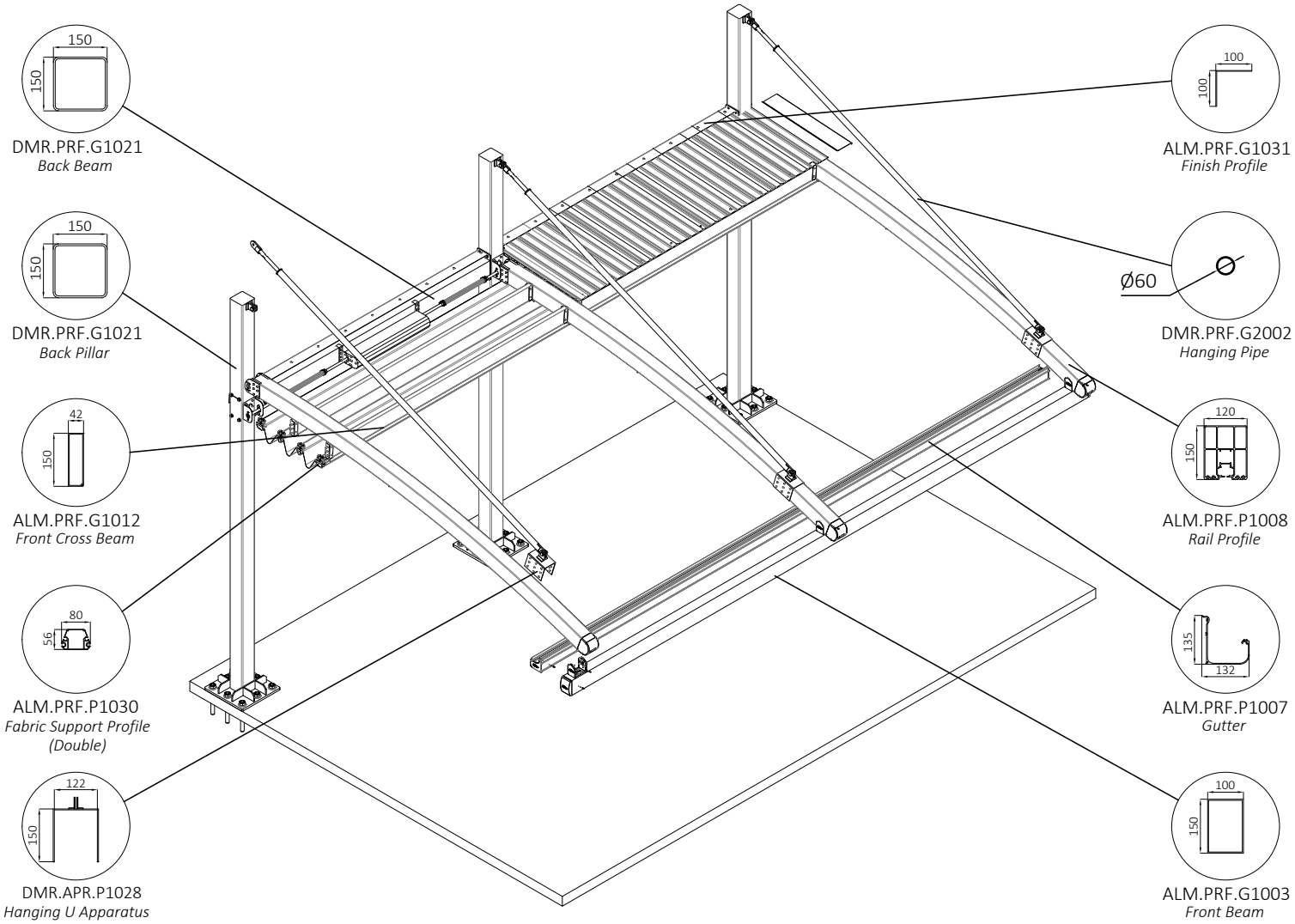

TECHNICAL FEATURES

COLLECTED FABRIC DIMENSIONS

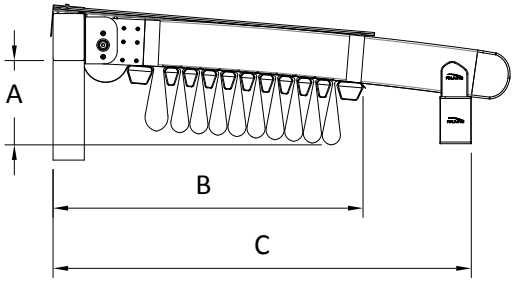

Projection cm

No of Fabric Support Profiles	200	250	300	350	400	450	500	550	600	C
5	31									73
6		32								79
7			33							86
9				35						99
10					36					105
11						37				112
13							39			125
14								40		131
15									41	138
	A									B

*Calculated according to a slope of 15%

DRAINAGE CALCULATION

Type	Max. m²
Full	39 m²/pc
Half	18 m²/pc

* per drainage

There should be at least one drainage, each 8 m length gutter.

RADIUS CHART

RADIUS	850	1500	2850

B	A			
250	63			
300	83			
350	107			
400	135	82		B
450	168	98		
500		116		
550		137		
600		160	93	

*The values are approx. ± 5 cm

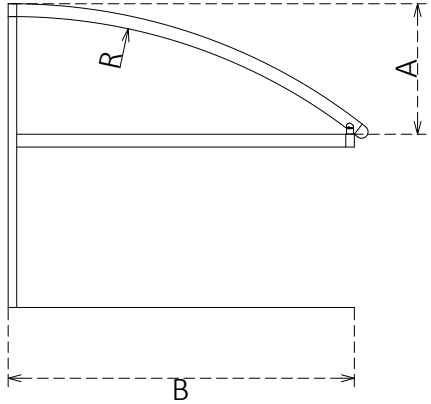

WIND RESISTANCE

WIDTH

PROJECTION (cm)	450	500	550	600	650	700	750	800	850	900	950	1000	1050	1100	1150	1200	1250	1300
400	10	10	10	9	9	9	9	8	8	8	9	9	9	9	8	8	8	8
450	9	9	9	8	8	8	8	7	7	7	8	8	8	8	7	7	7	7
500	8	8	8	8	8	7	7	7	7	6	8	7	7	7	7	7	7	6
550	8	8	7	7	7	7	6	6	6	6	7	7	7	6	6	6	6	6
600	7	7	7	6	6	6	6	6	5	5	6	6	6	6	6	6	5	5

All sides open

*The values are given according to the Beaufort scale.

**Calculated for Products with a front height of 250 cm according to Eurocode EN 1991-1-4 Terrain Category 4.

*** You can ask for new calculations for special designs.

APOLLO PLUS Freestanding

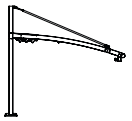

Width

Projection

	2 RAILS				3 RAILS								4 RAILS								5 RAILS		FS4	FS9	FS9-S
	250 cm	300 cm	350 cm	400 cm	450 cm	500 cm	550 cm	600 cm	650 cm	700 cm	750 cm	800 cm	850 cm	900 cm	950 cm	1000 cm	1050 cm	1100 cm	1150 cm	1200 cm	1250 cm	1300 cm			
200 cm	€ 6.254	€ 6.519	€ 7.028	€ 7.296	€ 8.912	€ 9.176	€ 9.444	€ 9.707	€ 10.218	€ 10.485	€ 10.797	€ 11.061	€ 12.445	€ 12.703	€ 13.201	€ 13.457	€ 13.711	€ 13.968	€ 14.220	€ 14.477	€ 16.409	€ 16.808	€ 734	€ 150	€ 199
250 cm	€ 6.540	€ 6.947	€ 7.332	€ 7.607	€ 9.344	€ 9.615	€ 10.030	€ 10.301	€ 10.686	€ 10.958	€ 11.280	€ 11.691	€ 13.193	€ 13.461	€ 13.832	€ 14.095	€ 14.499	€ 14.763	€ 15.026	€ 15.291	€ 17.343	€ 17.750	€ 811	€ 181	€ 249
300 cm	€ 6.983	€ 7.437	€ 7.863	€ 8.177	€ 10.072	€ 10.388	€ 10.842	€ 11.158	€ 11.583	€ 11.899	€ 12.261	€ 12.717	€ 14.377	€ 14.681	€ 15.099	€ 15.403	€ 15.847	€ 16.151	€ 16.459	€ 16.767	€ 18.973	€ 19.425	€ 887	€ 212	€ 299
350 cm	€ 7.414	€ 7.741	€ 8.174	€ 8.636	€ 10.655	€ 10.978	€ 11.304	€ 11.766	€ 12.203	€ 12.526	€ 12.899	€ 13.362	€ 15.146	€ 15.462	€ 16.018	€ 16.338	€ 16.654	€ 16.969	€ 17.419	€ 17.735	€ 20.066	€ 20.392	€ 963	€ 243	€ 349
400 cm	€ 7.711	€ 8.045	€ 8.488	€ 8.958	€ 11.102	€ 11.436	€ 11.773	€ 12.242	€ 12.687	€ 13.021	€ 13.401	€ 13.871	€ 15.783	€ 16.107	€ 16.675	€ 17.001	€ 17.327	€ 17.650	€ 18.113	€ 18.435	€ 20.895	€ 21.229	€ 1.040	€ 274	€ 399
450 cm	€ 8.015	€ 8.360	€ 8.812	€ 9.292	€ 11.560	€ 11.905	€ 12.249	€ 12.726	€ 13.182	€ 13.523	€ 13.915	€ 14.395	€ 16.428	€ 16.762	€ 17.342	€ 17.676	€ 18.009	€ 18.343	€ 18.813	€ 19.147	€ 21.731	€ 22.072	€ 1.116	€ 305	€ 449
500 cm	€ 8.314	€ 8.666	€ 9.129	€ 9.616	€ 12.013	€ 12.365	€ 12.718	€ 13.205	€ 13.667	€ 14.020	€ 14.419	€ 14.907	€ 17.072	€ 17.413	€ 18.001	€ 18.346	€ 18.687	€ 19.028	€ 19.508	€ 19.853	€ 22.562	€ 22.913	€ 1.192	€ 336	€ 499
550 cm	€ 8.614	€ 8.972	€ 9.446	€ 9.941	€ 12.466	€ 12.825	€ 13.186	€ 13.685	€ 14.152	€ 14.517	€ 14.923	€ 15.418	€ 17.716	€ 18.064	€ 18.660	€ 19.016	€ 19.364	€ 19.712	€ 20.203	€ 20.558	€ 23.393	€ 23.755	€ 1.269	€ 367	€ 549
600 cm	€ 8.913	€ 9.279	€ 9.763	€ 10.265	€ 12.919	€ 13.285	€ 13.655	€ 14.164	€ 14.637	€ 15.014	€ 15.428	€ 15.930	€ 18.360	€ 18.715	€ 19.320	€ 19.686	€ 20.041	€ 20.396	€ 20.898	€ 21.264	€ 24.224	€ 24.597	€ 1.345	€ 398	€ 598

FS3	€ 149	€ 156	€ 170	€ 187	€ 203	€ 218	€ 234	€ 249	€ 265	€ 280	€ 360	€ 376	€ 391	€ 407	€ 423	€ 439	€ 454	€ 470	€ 485	€ 501	€ 516	€ 532
FS5-A	€ 27	€ 35	€ 41	€ 46	€ 54	€ 60	€ 67	€ 73	€ 80	€ 86	€ 93	€ 99	€ 106	€ 112	€ 119	€ 125	€ 132	€ 138	€ 145	€ 151	€ 159	€ 165
FS3-E	€ 38	€ 48	€ 56	€ 64	€ 74	€ 82	€ 92	€ 100	€ 110	€ 118	€ 128	€ 136	€ 146	€ 154	€ 164	€ 172	€ 182	€ 190	€ 200	€ 209	€ 218	€ 227

FS3	Gutter System
FS5-A	Additional Fabric Support Profile (Standard)
FS5-E	Additional Fabric Support Profile (3 Axis)
FS4	Additional Rail for PLUS Series - Al. - 120x150mm
FS8	Lighting System
FS9	Side Beam for PLUS Series - Al. - 50x150mm
FS9-S	Side Beam for PLUS Series - Al. - 100x150mm (Special)

FS8		LED TYPE & MODULE		
		2 LED	3 LED	4 LED
FS8-S	SPOT	€ 125	€ 152	€ 179
FS8-L	LINEAR	€ 179	€ 233	-
FS8-E	3 AXIS	€ 206	€ 268	-

* FS9 Side Beam is not included in the price
* FS Flexy Plain/3D or Stam 6002 is included in the price
* Motor and Remote control is included in the price
* RAL Colours specified in Aluminium coating catalogue are included in price. Any other RAL colours which are existing in our Supplier's stock can be applied without extra cost.
* Standard colours are RAL9010, RAL7040, RAL1013, RAL7046, RAL9004, RAL3022, RAL120-2, RAL7036, RAL8019, RAL120-5, RAL8025, RAL4001, RAL620-3, RAL5008
* Painting cost has to be min. 125€
* Plastic parts coloured only specified colours

DEDUCTIONS

Price deduction can apply only front pillars, back pillars and side beam. The price of the front pillar, back pillar and side beam can be deducted from options price.

OPTIONS

FS10-150ST3	Extra pillar (150x150x3mm St.)	€ 748	pcs
FS10-150ST5	Extra pillar (150x150x5mm St.)	€ 1.116	pcs
FS11	Deco ceiling cover	€ 46	m²
FS12	Izo-Pro ceiling cover (up to 800 cm width)	€ 39	m²
FS15	Side beam pillar (50x100mm - Al)	€ 174	pcs
FS15-B	Side beam pillar (100x100mm - Al)	€ 335	pcs
FS16	Wood effect (*Price difference for standart patterns (up to 700cm projection) (*Can not be applied to steel construction or freestanding products with base plate.)	10% of product price	
FS19	Fix louver	€ 46	lm
FS24	W96 Ceiling Cover	€ 53	m²
FS25	Fabric support profile special color	€ 11	m²
FS26	Exclusive fabric difference	€ 31	m²
FS27	3 Axis lighting fabric support profile difference	€ 9	m²
FS28-1	Stainless steel chain - 100 cm	€ 46	1m
FS28-2	Stainless steel chain - 200 cm	€ 89	2m
FS28-3	Stainless steel chain - 300 cm	€ 134	3m
FS28-4	Stainless steel chain - 400 cm	€ 179	4m
FS29-1	Sun Sensor (SUNIS) (with Universal Receiver, it's included in the price)	€ 596	pcs
FS29-2	Wind Sensor (EOLIS RTS) (with Universal Receiver, it's included in the price)	€ 367	pcs
FS29-3	Sun and Wind Sensor (SOLIRIS) (with Universal Receiver, it's included in the price)	€ 459	pcs
FS30	CONNEXOON	€246	pcs
FS31-1	Remote Control - PURE - Telis 1	€55	pcs
FS31-4	Remote Control - PURE - Telis 4	€93	pcs
FS31-16	Remote Control - PURE - Telis 16	€264	pcs
FS32-1	Remote Control - PATIO - Telis 1	€76	pcs
FS32-4	Remote Control - PATIO - Telis 4	€123	pcs
FS33-1	Remote Control - LOUNGE - Telis 1	€93	pcs
FS33-4	Remote Control - LOUNGE - Telis 4	€133	pcs
FS34-1	Remote Control - MODULIS PURE - Telis 1	€125	pcs
FS34-4	Remote Control - MODULIS PURE - Telis 4	€192	pcs
FS35-1	Remote Control - MODULIS LOUNGE - Telis 1	€144	pcs
FS35-4	Remote Control - MODULIS LOUNGE - Telis 4	€220	pcs

*** Can't apply a sensor to the single motor product. For further information please contact with PALMIYE**

EXTENSIONS

Rail	PLUS - 120x150mm	€ 209	lm
Beam	Al. 42x150mm	€ 65	lm
Beam	Al. 50x150mm	€ 115	lm
Beam	Al. 100x150mm	€ 96	lm
Beam	St. 100x150x3mm	€ 190	lm
Beam	St. 100x150x5mm	€ 246	lm
Beam	St. 100x200x3mm	€ 193	lm
Beam	St. 100x200x5mm	€ 293	lm
Fabric protection cover	Al. - 63x___cm	€ 37	m²
Gutter	Special Profile	€ 28	lm
Pillar	St. 150x150x3mm	€ 261	lm
Pillar	St. 150x150x5mm	€ 390	lm

* Max. St 5mm front pillar height is 480cm

PRICE DIFFERENCE

BEAM GROUP

Back Beam

Standard	**St. 150x150x3mm**		
to	St. 150x150x5mm	€ 95	lm

Front Beam

Standard	**Al. 100x150mm**		
to	St. 100x150x3mm	€ 95	lm
	St. 100x150x5mm	€ 151	lm
	St. 100x200x3mm	€ 98	lm
	St. 100x200x5mm	€ 197	lm

PILLAR GROUP

Front Pillar

Standard	**St. 150x150x3mm**		
to	St.150x150x5mm	367€	lm

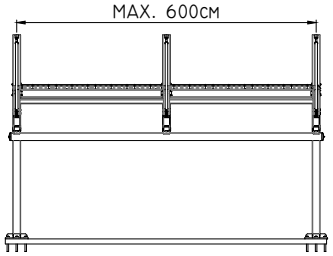

- The product produces as 3 mm steel beam and pillar.
- The front beam can't produces as a steel.
- With pillar reduction applications, Back Half Pillar must be installed at the back of each rail shaft.
- In standard applications 1 back pillar St. 150x150x3mm should be added to each rail shaft.
- When pillar reduction is applied, steel pillars should be 150x150x5 mm.
- Ground flanges are 380x380x15 mm

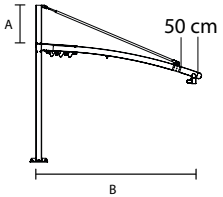

- Max. pillar length: 480 cm

STANDARD "A" VALUES

B (cm)	350	400	450	500	550	600
A (cm)	50	60	70	80	90	100

APOLLO

PLUS

Wall / Ceiling with Buttress

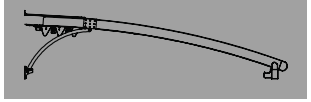

MAXIMUM DIMENSIONS

	WIDTH	PROJECTION
2 RAILS	400 cm	400 cm

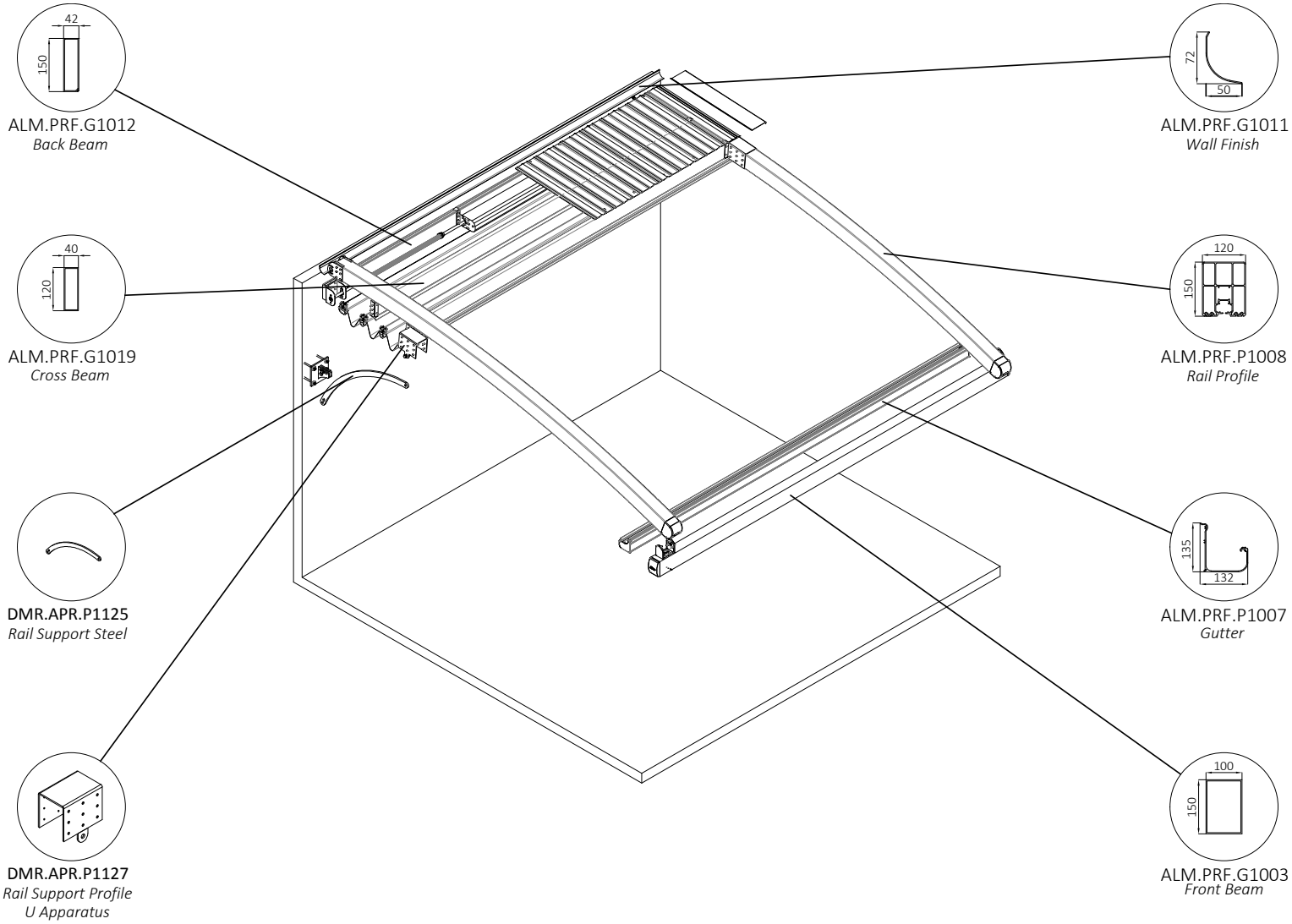

TECHNICAL FEATURES

COLLECTED FABRIC DIMENSIONS

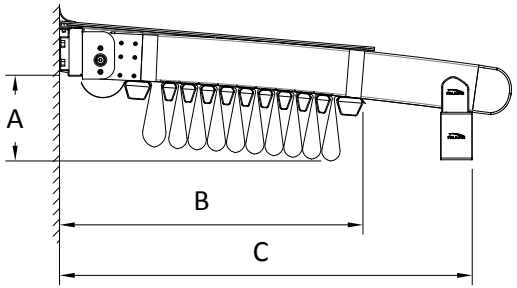

RADIUS CHART

RADIUS	R825	R1500

Projection	A		B
250	63		
300	83		
350	107		
400	135	82	

*The values are approx. ± 5 cm

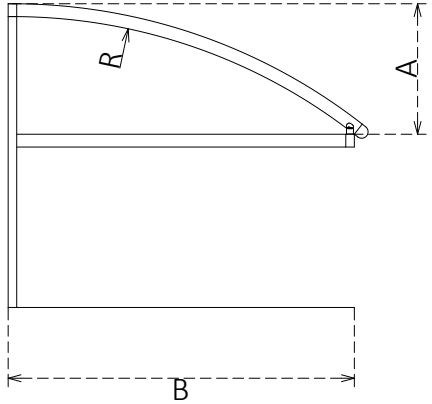

Projection cm

No of Fabric Support Profiles

	200	250	300	350	400	C
5	30					68
6		31				74
7			32			81
9				34		94
10					35	100
			A			B

*Calculated according to a slope of 15%

WIND RESISTANCE

WIDTH (cm)

PROJECTION (cm)

	250	300	350	400
200	11	11	11	11
250	11	11	11	11
300	11	11	11	11
350	11	11	10	10
400	10	10	10	9

All sides open

*The values are given according to the Beaufort scale.

**Calculated for Products with a front height of 250 cm according to Eurocode EN 1991-1-4 Terrain Category 4.

*** You can ask for new calculations for special designs.

DRAINAGE CALCULATION

Type	Max. m²
Full	39 m²/pc
Half	18 m²/pc

* per drainage

There should be at least one drainage,
each 8 m length gutter.

APOLLO PLUS Wall / Ceiling with Buttress

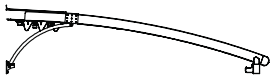

Width

Projection

	2 RAILS				FS4
	250 cm	300 cm	350 cm	400 cm	
200 cm	€ 5.333	€ 5.598	€ 6.107	€ 6.375	€ 734
250 cm	€ 5.619	€ 6.026	€ 6.411	€ 6.686	€ 811
300 cm	€ 6.061	€ 6.516	€ 6.941	€ 7.256	€ 887
350 cm	€ 6.493	€ 6.820	€ 7.252	€ 7.715	€ 963
400 cm	€ 6.790	€ 7.124	€ 7.567	€ 8.037	€ 1.040

FS3	€ 149	€ 156	€ 170	€ 187
FS5-A	€ 27	€ 35	€ 41	€ 46
FS5-E	€ 38	€ 48	€ 56	€ 64

*This product can't produces as a module.

FS3	Gutter System
FS5-A	Additional Fabric Support Profile (Standard)
FS5-E	Additional Fabric Support Profile (3 Axis)
FS4	Additional Rail for PLUS Series - Al. - 120x150mm
FS8	Lighting System

FS8		LED TYPE & MODULE		
		2 LED	3 LED	4 LED
FS8-S	SPOT	€ 125	€ 152	€ 179
FS8-L	LINEAR	€ 179	€ 233	-
FS8-E	3 AXIS	€ 206	€ 268	-

* FS9 Side Beam is not included in the price
* FS Flexy Plain/3D or Stam 6002 is included in the price
* Motor and Remote control is included in the price
* RAL Colours specified in Aluminium coating catalogue are included in price. Any other RAL colours which are existing in our Supplier's stock can be applied without extra cost.
* Standard colours are RAL9010, RAL7040, RAL1013, RAL7046, RAL9004, RAL3022, RAL120-2, RAL7036, RAL8019, RAL120-5, RAL8025, RAL4001, RAL620-3, RAL5008
* Painting cost has to be min. 125€
* Plastic parts coloured only specified colours

DEDUCTIONS

Price deduction can apply only front pillars, back pillars and side beam. The price of the front pillar, back pillar and side beam can be deducted from options price.

OPTIONS

FS11	Deco ceiling cover	€ 46	m^2
FS12	Izo-Pro ceiling cover (up to 800 cm width)	€ 39	m^2
FS16	Wood effect (*Price difference for standart patterns (up to 700cm projection) (*Can not be applied to steel construction or freestanding products with base plate.)	10% of product price	
FS19	Fix louver	€ 46	lm
FS24	W96 Ceiling Cover	€ 53	m^2
FS25	Fabric support profile special color	€ 11	m^2
FS26	Exclusive fabric difference	€ 31	m^2
FS27	3 Axis lighting fabric support profile difference	€ 9	m^2
FS28-1	Stainless steel chain - 100 cm	€ 46	1m
FS28-2	Stainless steel chain - 200 cm	€ 89	2m
FS28-3	Stainless steel chain - 300 cm	€ 134	3m
FS28-4	Stainless steel chain - 400 cm	€ 179	4m
FS29-1	Sun Sensor (SUNIS) (with Universal Receiver, it's included in the price)	€ 596	pcs
FS29-2	Wind Sensor (EOLIS RTS) (with Universal Receiver, it's included in the price)	€ 367	pcs
FS29-3	Sun and Wind Sensor (SOLIRIS) (with Universal Receiver, it's included in the price)	€ 459	pcs
FS30	CONNEXOON	€246	pcs
FS31-1	Remote Control - PURE - Telis 1	€55	pcs
FS31-4	Remote Control - PURE - Telis 4	€93	pcs
FS31-16	Remote Control - PURE - Telis 16	€264	pcs
FS32-1	Remote Control - PATIO - Telis 1	€76	pcs
FS32-4	Remote Control - PATIO - Telis 4	€123	pcs
FS33-1	Remote Control - LOUNGE - Telis 1	€93	pcs
FS33-4	Remote Control - LOUNGE - Telis 4	€133	pcs
FS34-1	Remote Control - MODULIS PURE - Telis 1	€125	pcs
FS34-4	Remote Control - MODULIS PURE - Telis 4	€192	pcs
FS35-1	Remote Control - MODULIS LOUNGE - Telis 1	€144	pcs
FS35-4	Remote Control - MODULIS LOUNGE - Telis 4	€220	pcs

*** Can't apply a sensor to the single motor product. For further information please contact with PALMIYE**

EXTENSIONS

Rail	PLUS - 120x150mm	€ 209	lm
Beam	Al. 42x150mm	€ 65	lm
Beam	Al. 50x150mm	€ 115	lm
Beam	Al. 100x150mm	€ 96	lm
Beam	St. 100x150x3mm	€ 190	lm
Beam	St. 100x150x5mm	€ 246	lm
Beam	St. 100x200x3mm	€ 193	lm
Beam	St. 100x200x5mm	€ 293	lm
Fabric protection cover	Al. - 63x___cm	€ 37	m^2
Gutter	Special Profile	€ 28	lm

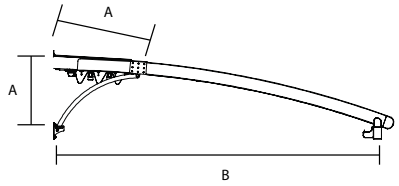

STANDARD "A" VALUES

B (cm)	250	300	350	400
A (cm)	70	80	90	100

PRICE DIFFERENCE

BEAM GROUP

Back Beam

Standard	Al. 42x150mm		
to	Al. 50x150mm	€ 50	lm
	St. 50x150x3mm	€ 62	lm
	St. 50x150x5mm	€ 122	lm
	Al. 100x150mm	€ 30	lm
	St. 100x150x3mm	€ 125	lm
	St. 100x150x5mm	€ 181	lm
	St. 100x200x3mm	€ 128	lm
	St. 100x200x5mm	€ 228	lm

Front Beam

Standard	**Al. 100x150mm**		
to	St. 100x150x3mm	€ 95	lm
	St. 100x150x5mm	€ 151	lm
	St. 100x200x3mm	€ 98	lm
	St. 100x200x5mm	€ 197	lm

APOLLO

PLUS

Freestanding with Buttress

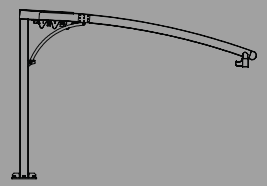

MAXIMUM DIMENSIONS

	WIDTH	PROJECTION
2 RAILS	400 cm	400 cm

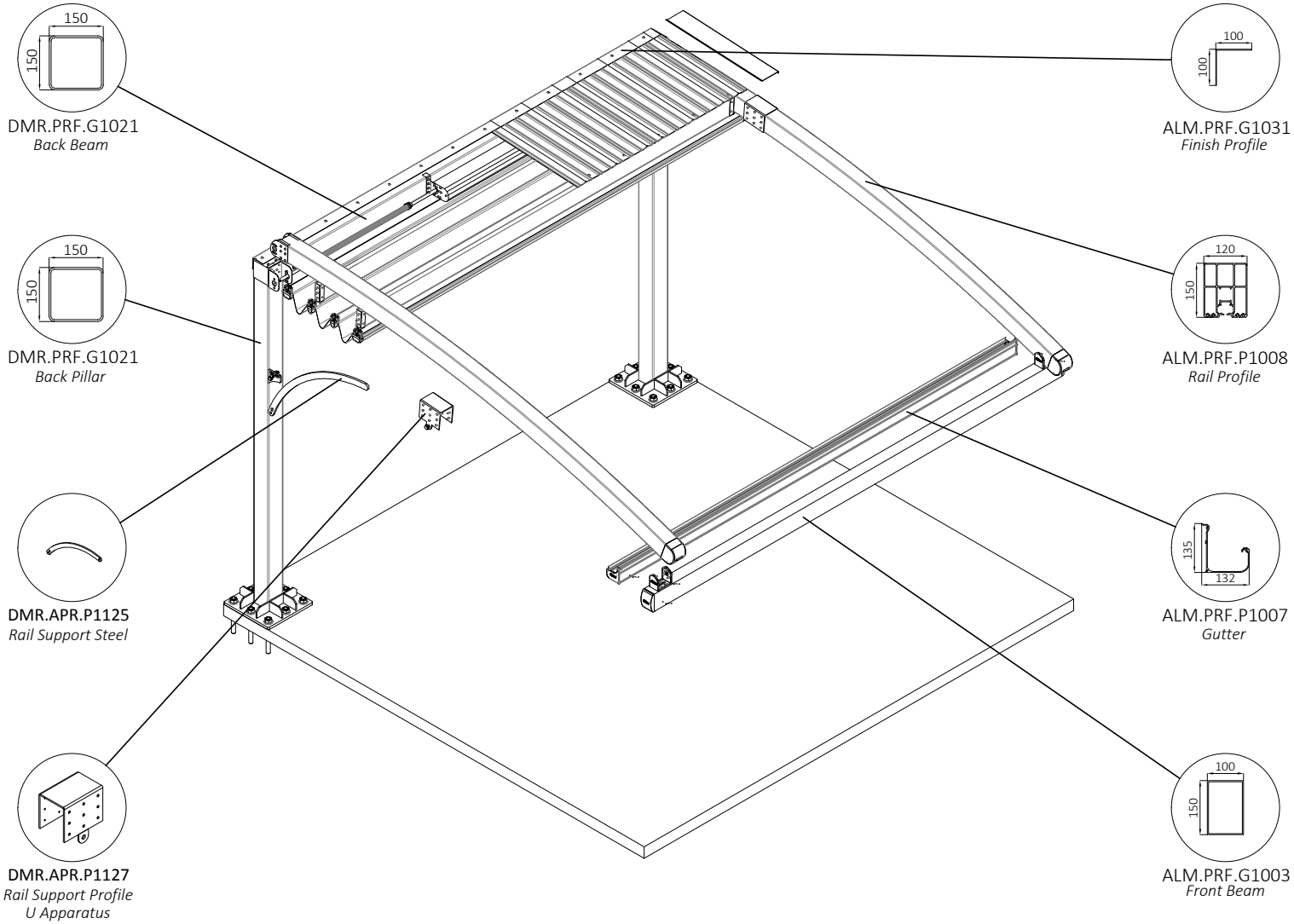

TECHNICAL FEATURES

COLLECTED FABRIC DIMENSIONS

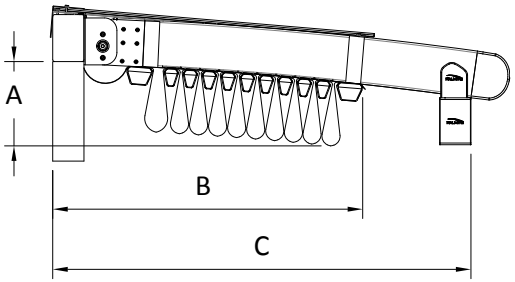

RADIUS CHART

RADIUS	850	1500

B	A	
250	63	
300	83	
350	107	
400	135	82

B

*The values are approx. ± 5 cm

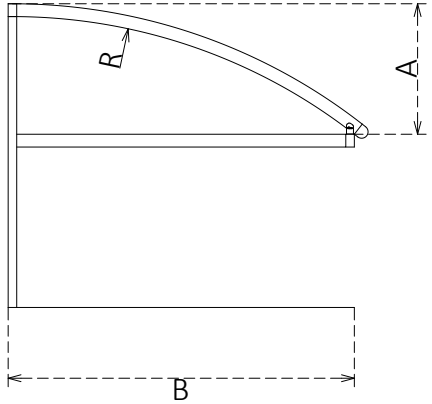

Projection cm

No of Fabric Support Profiles

	200	250	300	350	400	C
5	31					73
6		32				79
7			33			86
9				35		99
10					36	105
			A			B

*Calculated according to a slope of 15%

WIND RESISTANCE

WIDTH (cm)

PROJECTION (cm)

	250	300	350	400
200	11	11	11	11
250	11	11	11	11
300	11	11	11	11
350	11	11	10	10
400	10	10	10	9

All sides open

*The values are given according to the Beaufort scale.

**Calculated for Products with a front height of 250 cm according to Eurocode EN 1991-1-4 Terrain Category 4.

*** You can ask for new calculations for special designs.

DRAINAGE CALCULATION

Type	Max. m^2
Full	39 m^2/pc
Half	18 m^2/pc

* per drainage

There should be at least one drainage, each 8 m length gutter.

APOLLO PLUS Freestanding with Buttress

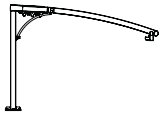

Width

Projection

	2 RAILS				FS4
	250 cm	300 cm	350 cm	400 cm	
200 cm	€ 6.254	€ 6.519	€ 7.028	€ 7.296	€ 734
250 cm	€ 6.540	€ 6.947	€ 7.332	€ 7.607	€ 811
300 cm	€ 6.983	€ 7.437	€ 7.863	€ 8.177	€ 887
350 cm	€ 7.414	€ 7.741	€ 8.174	€ 8.636	€ 963
400 cm	€ 7.711	€ 8.045	€ 8.488	€ 8.958	€ 1.040

FS3	€ 149	€ 156	€ 170	€ 187
FS5-A	€ 27	€ 35	€ 41	€ 46
FS5-E	€ 38	€ 48	€ 56	€ 64

*This product can't produces as a module.

FS3	Gutter System
FS5-A	Additional Fabric Support Profile (Standard)
FS5-E	Additional Fabric Support Profile (3 Axis)
FS4	Additional Rail for PLUS Series - Al. - 120x150mm
FS8	Lighting System

FS8		LED TYPE & MODULE		
		2 LED	3 LED	4 LED
FS8-S	SPOT	€ 125	€ 152	€ 179
FS8-L	LINEAR	€ 179	€ 233	-
FS8-E	3 AXIS	€ 206	€ 268	-

* FS9 Side Beam is not included in the price
* FS Flexy Plain/3D or Stam 6002 is included in the price
* Motor and Remote control is included in the price
* RAL Colours specified in Aluminium coating catalogue are included in price. Any other RAL colours which are existing in our Supplier's stock can be applied without extra cost.
* Standard colours are RAL9010, RAL7040, RAL1013, RAL7046, RAL9004, RAL3022, RAL120-2, RAL7036, RAL8019, RAL120-5, RAL8025, RAL4001, RAL620-3, RAL5008
* Painting cost has to be min. 125€
* Plastic parts coloured only specified colours

DEDUCTIONS

Price deduction can apply only front pillars, back pillars and side beam. The price of the front pillar, back pillar and side beam can be deducted from options price.

OPTIONS

FS11	Deco ceiling cover	€ 46	m^2
FS12	Izo-Pro ceiling cover (up to 800 cm width)	€ 39	m^2
FS16	Wood effect (*Price difference for standart patterns (up to 700cm projection) (*Can not be applied to steel construction or freestanding products with base plate.)	10% of product price	
FS19	Fix louver	€ 46	lm
FS24	W96 Ceiling Cover	€ 53	m^2
FS25	Fabric support profile special color	€ 11	m^2
FS26	Exclusive fabric difference	€ 31	m^2
FS27	3 Axis lighting fabric support profile difference	€ 9	m^2
FS28-1	Stainless steel chain - 100 cm	€ 46	1m
FS28-2	Stainless steel chain - 200 cm	€ 89	2m
FS28-3	Stainless steel chain - 300 cm	€ 134	3m
FS28-4	Stainless steel chain - 400 cm	€ 179	4m
FS29-1	Sun Sensor (SUNIS) (with Universal Receiver, it's included in the price)	€ 596	pcs
FS29-2	Wind Sensor (EOLIS RTS) (with Universal Receiver, it's included in the price)	€ 367	pcs
FS29-3	Sun and Wind Sensor (SOLIRIS) (with Universal Receiver, it's included in the price)	€ 459	pcs
FS30	CONNEXOON	€246	pcs
FS31-1	Remote Control - PURE - Telis 1	€55	pcs
FS31-4	Remote Control - PURE - Telis 4	€93	pcs
FS31-16	Remote Control - PURE - Telis 16	€264	pcs
FS32-1	Remote Control - PATIO - Telis 1	€76	pcs
FS32-4	Remote Control - PATIO - Telis 4	€123	pcs
FS33-1	Remote Control - LOUNGE - Telis 1	€93	pcs
FS33-4	Remote Control - LOUNGE - Telis 4	€133	pcs
FS34-1	Remote Control - MODULIS PURE - Telis 1	€125	pcs
FS34-4	Remote Control - MODULIS PURE - Telis 4	€192	pcs
FS35-1	Remote Control - MODULIS LOUNGE - Telis 1	€144	pcs
FS35-4	Remote Control - MODULIS LOUNGE - Telis 4	€220	pcs

EXTENSIONS

Rail	PLUS - 120x150mm	€ 209	lm
Beam	Al. 42x150mm	€ 65	lm
Beam	Al. 50x150mm	€ 115	lm
Beam	Al. 100x150mm	€ 96	lm
Beam	St. 100x150x3mm	€ 190	lm
Beam	St. 100x150x5mm	€ 246	lm
Beam	St. 100x200x3mm	€ 193	lm
Beam	St. 100x200x5mm	€ 293	lm
Fabric protection cover	Al. - 63x___cm	€ 37	m^2
Gutter	Special Profile	€ 28	lm

PRICE DIFFERENCE

BEAM GROUP

Back Beam	**Standard**	St. 150x150x3mm		
	to	St. 150x150x5mm	€ 95	lm
Front Beam	**Standard**	**Al. 100x150mm**		
	to	St. 100x150x3mm	€ 95	lm
		St. 100x150x5mm	€ 151	lm
		St. 100x200x3mm	€ 98	lm
		St. 100x200x5mm	€ 197	lm

PILLAR GROUP

Front Pillar	**Standart:**	**St. 100x150mm**		
	to	St.150x150x5mm	367€	lm

- The product produces as 3 mm steel beam and pillar.
- The front beam can't produces as a steel.
- In standard applications 1 back pillar St. 150x150x3mm should be added to each rail shaft.
- When pillar reduction is applied, steel pillars should be 150x150x5 mm.
- Ground flanges are 380x380x15 mm

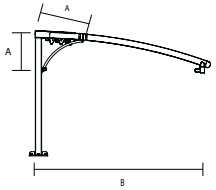

- Max. pillar length: 480 cm

STANDARD "A" VALUES

B (cm)	250	300	350	400
A (cm)	70	80	90	100

*** Can't apply a sensor to the single motor product. For further information please contact with PALMIYE**

APOLLO
COMPACT
Wall / Ceiling

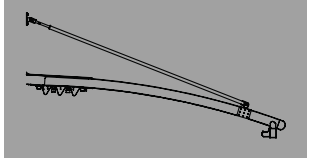

MAXIMUM DIMENSIONS

	WIDTH	PROJECTION
2 RAILS	400 cm	600 cm
3 RAILS	800 cm	600 cm
4 RAILS	1200 cm	600 cm
5 RAILS	1300 cm	600 cm

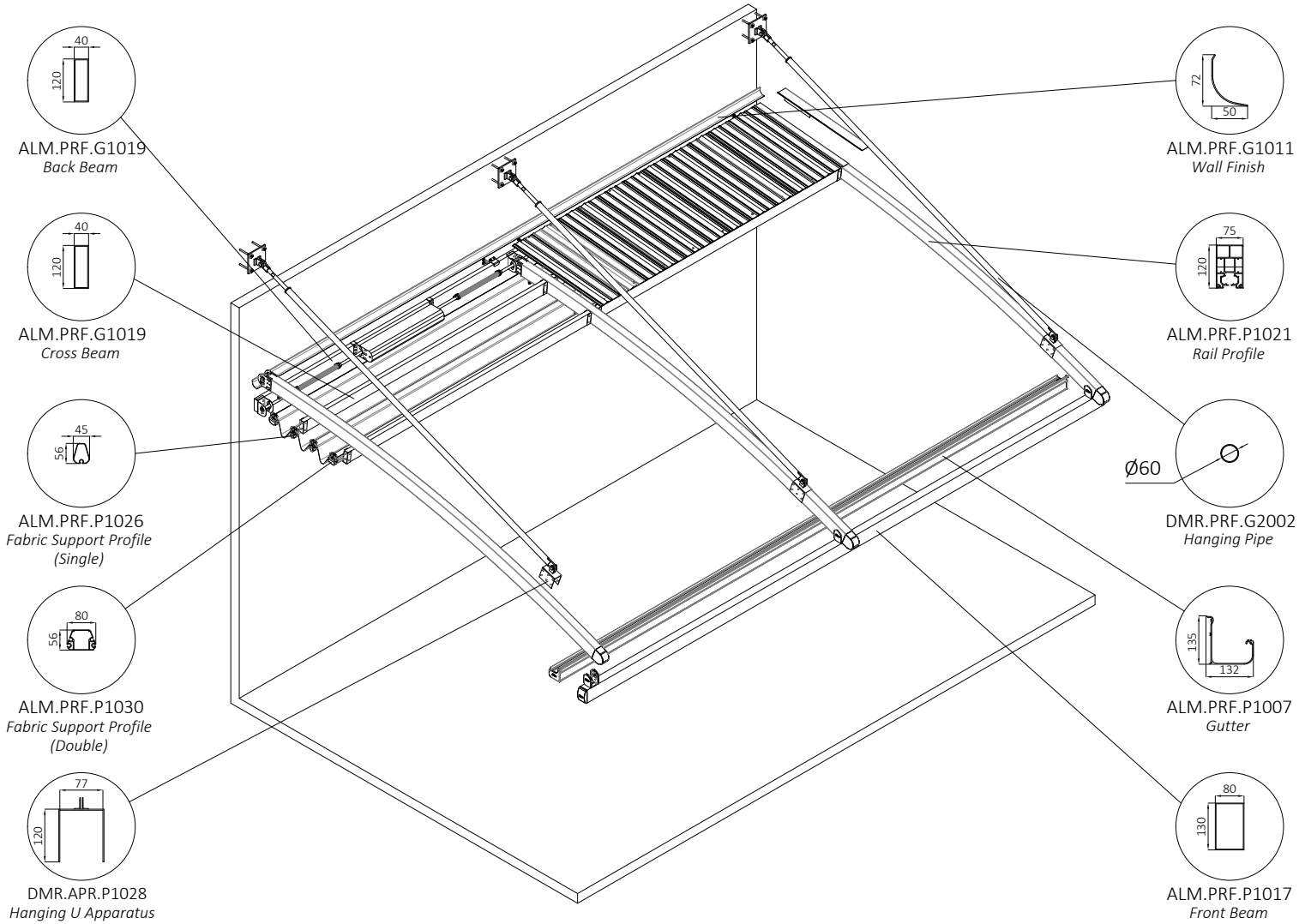

TECHNICAL FEATURES

COLLECTED FABRIC DIMENSIONS

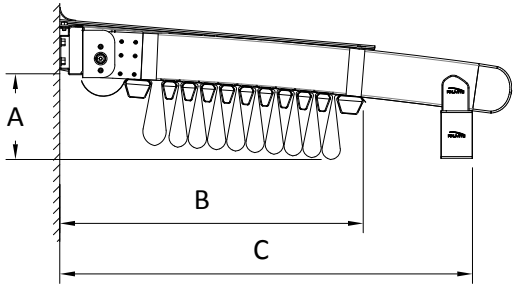

RADIUS CHART

RADIUS	850	1500	2850

Projection	A		
300	83		
350	107		
400	135	82	
450		98	
500		116	
550		137	
600		160	93

B

*The values are approx. ± 5 cm

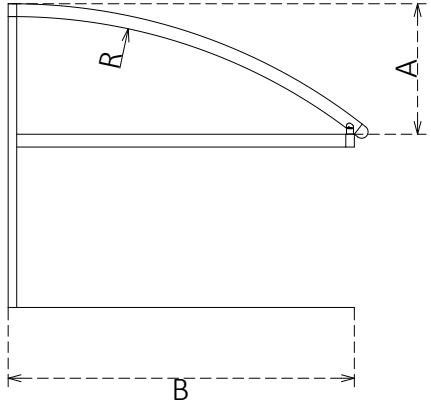

No of Fabric Support Profiles	Projection cm 200	250	300	350	400	450	500	550	600	C
5	30									68
6		31								74
7			32							81
9				34						94
10					35					100
11						36				107
13							38			120
14								39		126
15									40	133
					A					B

*Calculated according to a slope of 15%

WIND RESISTANCE

PROJECTION (cm)	WIDTH (cm) 450	500	550	600	650	700	750	800	850	900	950	1000	1050	1100	1150	1200	1250	1300
400	10	10	10	9	9	9	8	8	8	7	9	9	9	8	8	8	8	7
450	10	9	8	8	8	8	7	7	7	7	8	8	8	7	7	7	7	7
500	9	8	7	7	7	7	6	6	6	6	7	7	7	6	6	6	6	6
550	8	7	7	7	7	6	6	6	6	6	7	6	6	6	6	6	6	6
600	7	6	6	6	6	5	5	5	5	5	6	5	5	5	5	5	5	5

All sides open

*The values are given according to the Beaufort scale.

**Calculated for Products with a front height of 250 cm according to Eurocode EN 1991-1-4 Terrain Category 4.

*** You can ask for new calculations for special designs.

DRAINAGE CALCULATION

Type	Max. m²
COMPACT	30 m²/pc

* per drainage

There should be at least one drainage, each 8 m length gutter.

APOLLO COMPACT Wall / Ceiling

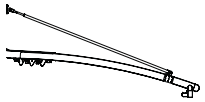

Width

Projection

	2 RAILS				3 RAILS								4 RAILS								5 RAILS		FS4 FS10-C	FS9-C
	250 cm	300 cm	350 cm	400 cm	450 cm	500 cm	550 cm	600 cm	650 cm	700 cm	750 cm	800 cm	850 cm	900 cm	950 cm	1000 cm	1050 cm	1100 cm	1150 cm	1200 cm	1250 cm	1300 cm		
200 cm	€ 4.321	€ 4.534	€ 4.945	€ 5.160	€ 6.094	€ 6.305	€ 6.520	€ 6.731	€ 7.142	€ 7.355	€ 7.605	€ 7.815	€ 8.559	€ 8.764	€ 9.164	€ 9.368	€ 9.569	€ 9.773	€ 9.973	€ 10.177	€ 11.359	€ 11.677	€ 606	€ 124
250 cm	€ 4.548	€ 4.876	€ 5.186	€ 5.407	€ 6.437	€ 6.654	€ 6.988	€ 7.204	€ 7.512	€ 7.729	€ 7.987	€ 8.317	€ 9.153	€ 9.366	€ 9.663	€ 9.872	€ 10.195	€ 10.404	€ 10.612	€ 10.822	€ 12.099	€ 12.422	€ 669	€ 149
300 cm	€ 4.901	€ 5.267	€ 5.610	€ 5.862	€ 7.019	€ 7.272	€ 7.636	€ 7.889	€ 8.229	€ 8.481	€ 8.770	€ 9.135	€ 10.098	€ 10.340	€ 10.673	€ 10.915	€ 11.268	€ 11.510	€ 11.754	€ 11.998	€ 13.397	€ 13.756	€ 732	€ 175
350 cm	€ 5.246	€ 5.507	€ 5.855	€ 6.227	€ 7.483	€ 7.740	€ 8.000	€ 8.371	€ 8.720	€ 8.978	€ 9.276	€ 9.645	€ 10.708	€ 10.958	€ 11.403	€ 11.655	€ 11.906	€ 12.155	€ 12.514	€ 12.763	€ 14.262	€ 14.518	€ 795	€ 200
400 cm	€ 5.480	€ 5.748	€ 6.103	€ 6.480	€ 7.836	€ 8.101	€ 8.371	€ 8.745	€ 9.100	€ 9.366	€ 9.670	€ 10.045	€ 11.210	€ 11.466	€ 11.919	€ 12.177	€ 12.435	€ 12.690	€ 13.058	€ 13.313	€ 14.912	€ 15.175	€ 857	€ 227
450 cm	€ 5.719	€ 5.996	€ 6.357	€ 6.742	€ 8.196	€ 8.471	€ 8.745	€ 9.127	€ 9.490	€ 9.761	€ 10.073	€ 10.456	€ 11.716	€ 11.981	€ 12.442	€ 12.706	€ 12.971	€ 13.234	€ 13.606	€ 13.870	€ 15.566	€ 15.834	€ 920	€ 252
500 cm	€ 5.955	€ 6.237	€ 6.606	€ 6.997	€ 8.552	€ 8.832	€ 9.114	€ 9.502	€ 9.871	€ 10.151	€ 10.468	€ 10.857	€ 12.221	€ 12.491	€ 12.959	€ 13.230	€ 13.500	€ 13.768	€ 14.150	€ 14.420	€ 16.216	€ 16.492	€ 984	€ 278
550 cm	€ 6.191	€ 6.478	€ 6.855	€ 7.252	€ 8.909	€ 9.193	€ 9.482	€ 9.878	€ 10.251	€ 10.541	€ 10.863	€ 11.257	€ 12.725	€ 13.002	€ 13.475	€ 13.755	€ 14.029	€ 14.302	€ 14.693	€ 14.971	€ 16.866	€ 17.151	€ 1.047	€ 303
600 cm	€ 6.427	€ 6.718	€ 7.105	€ 7.508	€ 9.265	€ 9.555	€ 9.850	€ 10.253	€ 10.631	€ 10.931	€ 11.257	€ 11.658	€ 13.229	€ 13.512	€ 13.991	€ 14.280	€ 14.559	€ 14.836	€ 15.237	€ 15.522	€ 17.515	€ 17.809	€ 1.110	€ 329

FS3	€ 149	€ 156	€ 170	€ 187	€ 203	€ 218	€ 234	€ 249	€ 265	€ 280	€ 360	€ 376	€ 391	€ 407	€ 423	€ 439	€ 454	€ 470	€ 485	€ 501	€ 516	€ 532
FS5-A	€ 27	€ 35	€ 41	€ 46	€ 54	€ 60	€ 67	€ 73	€ 80	€ 86	€ 93	€ 99	€ 106	€ 112	€ 119	€ 125	€ 132	€ 138	€ 145	€ 151	€ 159	€ 165
FS5-E	€ 38	€ 48	€ 56	€ 64	€ 74	€ 82	€ 92	€ 100	€ 110	€ 118	€ 128	€ 136	€ 146	€ 154	€ 164	€ 172	€ 182	€ 190	€ 200	€ 209	€ 218	€ 227

FS3	Gutter System
FS5-A	Additional Fabric Support Profile (Standard)
FS5-E	Additional Fabric Support Profile (3 Axis)
FS4	Additional Rail for COMPACT Series - Al. - 75x120mm
FS8	Lighting System
FS9-C	Side Beam for COMPACT Series - Al. - 80x130mm

FS8		LED TYPE & MODULE		
		2 LED	3 LED	4 LED
FS8-S	SPOT	€ 125	€ 152	€ 179
FS8-L	LINEAR	€ 179	€ 233	-
FS8-E	3 AXIS	€ 206	€ 268	-

* FS9 Side Beam is not included in the price
* FS Flexy Plain/3D or Stam 6002 is included in the price
* Motor and Remote control is included in the price
* RAL Colours specified in Aluminium coating catalogue are included in price. Any other RAL colours which are existing in our Supplier's stock can be applied without extra cost.
* Standard colours are RAL9010, RAL7040, RAL1013, RAL7046, RAL9004, RAL3022, RAL120-2, RAL7036, RAL8019, RAL120-5, RAL8025, RAL4001, RAL620-3, RAL5008
* Painting cost has to be min. 125€
* Plastic parts coloured only specified colours

DEDUCTIONS

Price deduction can apply only front pillars, back pillars and side beam. The price of the front pillar, back pillar and side beam can be deducted from options price.

OPTIONS

FS11	Deco ceiling cover	€ 46	m^2
FS12	Izo-Pro ceiling cover (up to 800 cm width)	€ 39	m^2
FS15-C	Side beam pillar (80x80mm - Al)	€ 246	pcs
FS16	Wood effect (*Price difference for standart patterns (up to 700cm projection) (*Can not be applied to steel construction or freestanding products with base plate.)	10% of product price	
FS19	Fix louver	€ 46	lm
FS24	W96 Ceiling Cover	€ 53	m^2
FS25	Fabric support profile special color	€ 11	m^2
FS26	Exclusive fabric difference	€ 31	m^2
FS27	3 Axis lighting fabric support profile difference	€ 9	m^2
FS28-1	Stainless steel chain - 100 cm	€ 46	1m
FS28-2	Stainless steel chain - 200 cm	€ 89	2m
FS28-3	Stainless steel chain - 300 cm	€ 134	3m
FS28-4	Stainless steel chain - 400 cm	€ 179	4m
FS29-1	Sun Sensor (SUNIS) (with Universal Receiver, it's included in the price)	€ 596	pcs
FS29-2	Wind Sensor (EOLIS RTS) (with Universal Receiver, it's included in the price)	€ 367	pcs
FS29-3	Sun and Wind Sensor (SOLIRIS) (with Universal Receiver, it's included in the price)	€ 459	pcs
FS30	CONNEXOON	€246	pcs
FS31-1	Remote Control - PURE - Telis 1	€55	pcs
FS31-4	Remote Control - PURE - Telis 4	€93	pcs
FS31-16	Remote Control - PURE - Telis 16	€264	pcs
FS32-1	Remote Control - PATIO - Telis 1	€76	pcs
FS32-4	Remote Control - PATIO - Telis 4	€123	pcs
FS33-1	Remote Control - LOUNGE - Telis 1	€93	pcs
FS33-4	Remote Control - LOUNGE - Telis 4	€133	pcs
FS34-1	Remote Control - MODULIS PURE - Telis 1	€125	pcs
FS34-4	Remote Control - MODULIS PURE - Telis 4	€192	pcs
FS35-1	Remote Control - MODULIS LOUNGE - Telis 1	€144	pcs
FS35-4	Remote Control - MODULIS LOUNGE - Telis 4	€220	pcs

EXTENSIONS

Rail	COMPACT - 75x120mm	€ 128	lm
Beam	Al. 40x120mm	€ 42	lm
Beam	Al. 42x150mm	€ 65	lm
Beam	Al. 50x150mm	€ 115	lm
Beam	Al. 80x130mm	€ 61	lm
Beam	Al. 100x150mm	€ 96	lm
Beam	St. 100x150x3mm	€ 190	lm
Beam	St. 100x150x5mm	€ 246	lm
Beam	St. 100x200x3mm	€ 193	lm
Beam	St. 100x200x5mm	€ 293	lm
Fabric protection cover	Al. - 63x___cm	€ 37	m^2
Gutter	Special Profile	€ 28	lm

PRICE DIFFERENCE

BEAM GROUP

Back Beam

Standard	**Al. 40x120mm**		
to	Al. 42x150mm	€ 24	lm
	Al. 50x150mm	€ 74	lm
	Al. 80x130mm	€ 19	lm
	St. 50x150x3mm	€ 86	lm
	St. 50x150x5mm	€ 146	lm
	Al. 100x150mm	€ 54	lm
	St. 100x150x3mm	€ 149	lm
	St. 100x150x5mm	€ 205	lm
	St. 100x200x3mm	€ 152	lm
	St. 100x200x5mm	€ 251	lm

Front Beam

Standard	**Al. 80x130mm**		
to	Al. 100x150mm	€ 35	lm
	St. 100x150x3mm	€ 130	lm
	St. 100x150x5mm	€ 186	lm
	St. 100x200x3mm	€ 133	lm
	St. 100x200x5mm	€ 233	lm

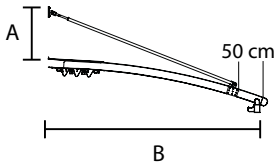

STANDARD "A" VALUES

B (cm)	350	400	450	500	550	600
A (cm)	50	60	70	80	90	100

*** Can't apply a sensor to the single motor product. For further information please contact with PALMIYE**

APOLLO

COMPACT
Freestanding

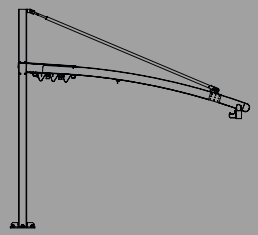

MAXIMUM DIMENSIONS

	WIDTH	PROJECTION
2 RAILS	400 cm	600 cm
3 RAILS	800 cm	600 cm
4 RAILS	1200 cm	600 cm
5 RAILS	1300 cm	600 cm

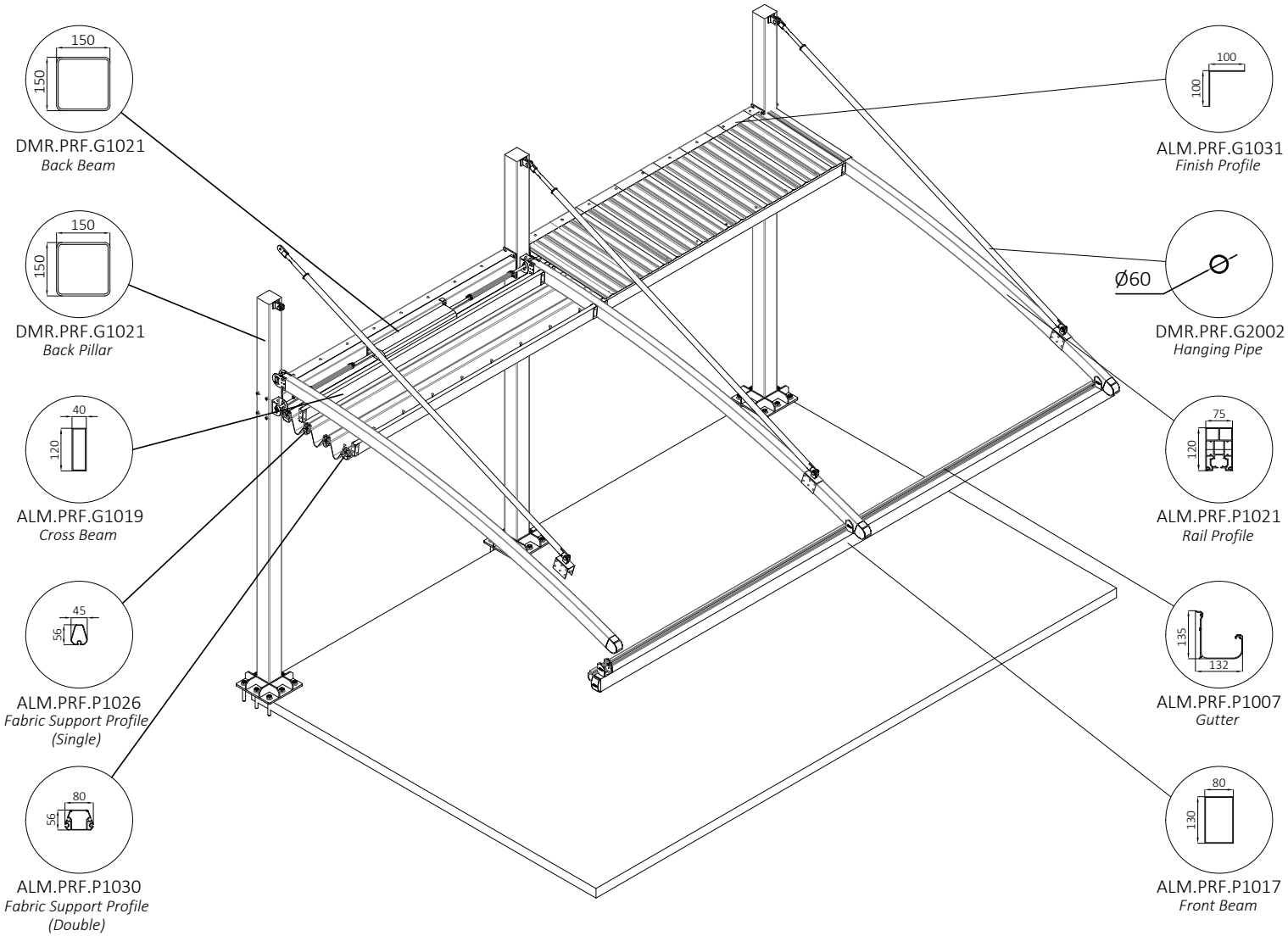

TECHNICAL FEATURES

COLLECTED FABRIC DIMENSIONS

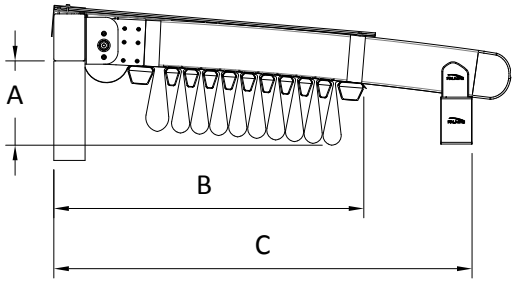

Projection cm

No of Fabric Support Profiles	200	250	300	350	400	450	500	550	600	C
5	31									73
6		32								79
7			33							86
9				35						99
10					36					105
11						37				112
13							39			125
14								40		131
15									41	138
				A						B

*Calculated according to a slope of 15%

RADIUS CHART

RADIUS	850	1500	2850

B	A		
250	63		
300	83		
350	107		
400	135	82	
450	168	98	
500		116	
550		137	
600		160	93

B

*The values are approx. ± 5 cm

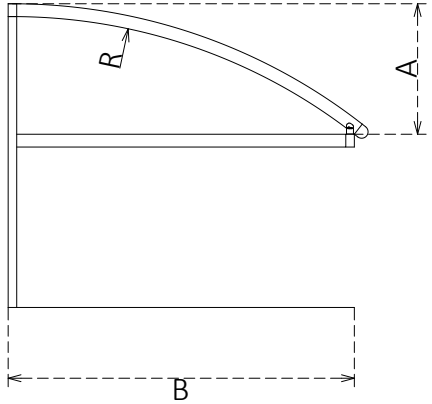

WIND RESISTANCE

WIDTH (cm)

PROJECTION (cm)	450	500	550	600	650	700	750	800	850	900	950	1000	1050	1100	1150	1200	1250	1300
400	10	10	10	9	9	9	9	8	8	8	9	9	9	9	8	8	8	8
450	9	9	9	8	8	8	8	7	7	7	8	8	8	8	7	7	7	7
500	8	8	8	8	8	7	7	7	7	6	8	7	7	7	7	7	7	6
550	8	8	7	7	7	7	6	6	6	6	7	7	7	6	6	6	6	6
600	7	7	7	6	6	6	6	6	5	5	6	6	6	6	6	6	5	5

All sides open

*The values are given according to the Beaufort scale.

**Calculated for Products with a front height of 250 cm according to Eurocode EN 1991-1-4 Terrain Category 4.

*** You can ask for new calculations for special designs.

DRAINAGE CALCULATION

Type	Max. m²
COMPACT	30 m²/pc

* per drainage

There should be at least one drainage, each 8 m length gutter.

APOLLO COMPACT Freestanding

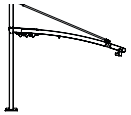

Width

	2 RAILS				3 RAILS								4 RAILS								5 RAILS		FS4 FS10-C	FS9-C
	250 cm	300 cm	350 cm	400 cm	450 cm	500 cm	550 cm	600 cm	650 cm	700 cm	750 cm	800 cm	850 cm	900 cm	950 cm	1000 cm	1050 cm	1100 cm	1150 cm	1200 cm	1250 cm	1300 cm		
200 cm	€ 5.242	€ 5.455	€ 5.867	€ 6.081	€ 7.475	€ 7.686	€ 7.902	€ 8.113	€ 8.523	€ 8.737	€ 8.987	€ 9.197	€ 10.402	€ 10.607	€ 11.006	€ 11.210	€ 11.411	€ 11.615	€ 11.816	€ 12.019	€ 13.662	€ 13.980	€ 606	€ 124
250 cm	€ 5.470	€ 5.798	€ 6.107	€ 6.328	€ 7.819	€ 8.036	€ 8.370	€ 8.585	€ 8.894	€ 9.111	€ 9.369	€ 9.699	€ 10.995	€ 11.209	€ 11.506	€ 11.714	€ 12.037	€ 12.246	€ 12.455	€ 12.664	€ 14.402	€ 14.725	€ 669	€ 149
300 cm	€ 5.823	€ 6.189	€ 6.531	€ 6.784	€ 8.401	€ 8.653	€ 9.018	€ 9.271	€ 9.611	€ 9.862	€ 10.152	€ 10.517	€ 11.941	€ 12.183	€ 12.515	€ 12.757	€ 13.110	€ 13.352	€ 13.597	€ 13.840	€ 15.700	€ 16.059	€ 732	€ 175
350 cm	€ 6.167	€ 6.428	€ 6.776	€ 7.148	€ 8.864	€ 9.122	€ 9.382	€ 9.753	€ 10.102	€ 10.359	€ 10.658	€ 11.027	€ 12.550	€ 12.800	€ 13.245	€ 13.498	€ 13.748	€ 13.997	€ 14.356	€ 14.605	€ 16.565	€ 16.821	€ 795	€ 200
400 cm	€ 6.401	€ 6.669	€ 7.024	€ 7.401	€ 9.217	€ 9.483	€ 9.753	€ 10.127	€ 10.482	€ 10.748	€ 11.052	€ 11.427	€ 13.052	€ 13.308	€ 13.761	€ 14.019	€ 14.278	€ 14.533	€ 14.900	€ 15.155	€ 17.215	€ 17.478	€ 857	€ 227
450 cm	€ 6.640	€ 6.917	€ 7.278	€ 7.663	€ 9.577	€ 9.853	€ 10.127	€ 10.508	€ 10.872	€ 11.143	€ 11.455	€ 11.838	€ 13.559	€ 13.823	€ 14.285	€ 14.548	€ 14.813	€ 15.076	€ 15.448	€ 15.712	€ 17.869	€ 18.137	€ 920	€ 252
500 cm	€ 6.877	€ 7.158	€ 7.527	€ 7.919	€ 9.934	€ 10.214	€ 10.495	€ 10.884	€ 11.252	€ 11.533	€ 11.850	€ 12.238	€ 14.063	€ 14.334	€ 14.801	€ 15.073	€ 15.342	€ 15.611	€ 15.992	€ 16.263	€ 18.519	€ 18.795	€ 984	€ 278
550 cm	€ 7.113	€ 7.399	€ 7.777	€ 8.174	€ 10.290	€ 10.575	€ 10.864	€ 11.260	€ 11.633	€ 11.923	€ 12.244	€ 12.639	€ 14.567	€ 14.844	€ 15.317	€ 15.597	€ 15.872	€ 16.145	€ 16.536	€ 16.814	€ 19.169	€ 19.454	€ 1.047	€ 303
600 cm	€ 7.349	€ 7.640	€ 8.026	€ 8.429	€ 10.647	€ 10.937	€ 11.232	€ 11.635	€ 12.013	€ 12.312	€ 12.639	€ 13.040	€ 15.072	€ 15.354	€ 15.833	€ 16.122	€ 16.401	€ 16.679	€ 17.079	€ 17.364	€ 19.818	€ 20.112	€ 1.110	€ 329

FS3	€ 149	€ 156	€ 170	€ 187	€ 203	€ 218	€ 234	€ 249	€ 265	€ 280	€ 360	€ 376	€ 391	€ 407	€ 423	€ 439	€ 454	€ 470	€ 485	€ 501	€ 516	€ 532
FS5-A	€ 27	€ 35	€ 41	€ 46	€ 54	€ 60	€ 67	€ 73	€ 80	€ 86	€ 93	€ 99	€ 106	€ 112	€ 119	€ 125	€ 132	€ 138	€ 145	€ 151	€ 159	€ 165
FS5-E	€ 38	€ 48	€ 56	€ 64	€ 74	€ 82	€ 92	€ 100	€ 110	€ 118	€ 128	€ 136	€ 146	€ 154	€ 164	€ 172	€ 182	€ 190	€ 200	€ 209	€ 218	€ 227

FS3	Gutter System
FS5-A	Additional Fabric Support Profile (Standard)
FS5-E	Additional Fabric Support Profile (3 Axis)
FS4	Additional Rail for COMPACT Series - Al. - 75x120mm
FS8	Lighting System
FS9-C	Side Beam for COMPACT Series - Al. - 80x130mm

FS8		LED TYPE & MODULE		
		2 LED	3 LED	4 LED
FS8-S	SPOT	€ 125	€ 152	€ 179
FS8-L	LINEAR	€ 179	€ 233	-
FS8-E	3 AXIS	€ 206	€ 268	-

* FS9 Side Beam is not included in the price
* FS Flexy Plain/3D or Stam 6002 is included in the price
* Motor and Remote control is included in the price
* RAL Colours specified in Aluminium coating catalogue are included in price. Any other RAL colours which are existing in our Supplier's stock can be applied without extra cost.
* Standard colours are RAL9010, RAL7040, RAL1013, RAL7046, RAL9004, RAL3022, RAL120-2, RAL7036, RAL8019, RAL120-5, RAL8025, RAL4001, RAL620-3, RAL5008
* Painting cost has to be min. 125€
* Plastic parts coloured only specified colours

DEDUCTIONS
Price deduction can apply only front pillars, back pillars and side beam. The price of the front pillar, back pillar and side beam can be deducted from options price.

OPTIONS

FS10-150ST3	Extra pillar (150x150x3mm St.)	€ 748	pcs
FS10-150ST5	Extra pillar (150x150x5mm St.)	€ 1.116	pcs
FS11	Deco ceiling cover	€ 46	m^2
FS12	Izo-Pro ceiling cover (up to 800 cm width)	€ 39	m^2
FS15-C	Side beam pillar (80x80mm - Al)	€ 246	pcs
FS16	Wood effect (*Price difference for standart patterns (up to 700cm projection) (*Can not be applied to steel construction or freestanding products with base plate.)	10% of product price	
FS19	Fix louver	€ 46	lm
FS24	W96 Ceiling Cover	€ 53	m^2
FS25	Fabric support profile special color	€ 11	m^2
FS26	Exclusive fabric difference	€ 31	m^2
FS27	3 Axis lighting fabric support profile difference	€ 9	m^2
FS28-1	Stainless steel chain - 100 cm	€ 46	1m
FS28-2	Stainless steel chain - 200 cm	€ 89	2m
FS28-3	Stainless steel chain - 300 cm	€ 134	3m
FS28-4	Stainless steel chain - 400 cm	€ 179	4m
FS29-1	Sun Sensor (SUNIS) (with Universal Receiver, it's included in the price)	€ 596	pcs
FS29-2	Wind Sensor (EOLIS RTS) (with Universal Receiver, it's included in the price)	€ 367	pcs
FS29-3	Sun and Wind Sensor (SOLIRIS) (with Universal Receiver, it's included in the price)	€ 459	pcs
FS30	CONNEXOON	€246	pcs
FS31-1	Remote Control - PURE - Telis 1	€55	pcs
FS31-4	Remote Control - PURE - Telis 4	€93	pcs
FS31-16	Remote Control - PURE - Telis 16	€264	pcs
FS32-1	Remote Control - PATIO - Telis 1	€76	pcs
FS32-4	Remote Control - PATIO - Telis 4	€123	pcs
FS33-1	Remote Control - LOUNGE - Telis 1	€93	pcs
FS33-4	Remote Control - LOUNGE - Telis 4	€133	pcs
FS34-1	Remote Control - MODULIS PURE - Telis 1	€125	pcs
FS34-4	Remote Control - MODULIS PURE - Telis 4	€192	pcs
FS35-1	Remote Control - MODULIS LOUNGE - Telis 1	€144	pcs
FS35-4	Remote Control - MODULIS LOUNGE - Telis 4	€220	pcs

*** Can't apply a sensor to the single motor product. For further information please contact with PALMIYE**

EXTENSIONS

Rail	COMPACT - 75x120mm	€ 128	lm
Beam	Al. 80x130mm	€ 61	lm
Beam	Al. 100x150mm	€ 96	lm
Beam	St. 100x150x3mm	€ 190	lm
Beam	St. 100x150x5mm	€ 246	lm
Beam	St. 100x200x3mm	€ 193	lm
Beam	St. 100x200x5mm	€ 293	lm
Fabric protection cover	Al. - 63x___cm	€ 37	m^2
Gutter	Special Profile	€ 28	lm
Pillar	St. 150x150x3mm	€ 261	lm
Pillar	St. 150x150x5mm	€ 390	lm

* Max. St 5mm front pillar height is 480cm

PRICE DIFFERENCE

	BEAM GROUP			
Back Beam	**Standard**	St. 150x150x3mm		
	to	St. 150x150x5mm	€ 95	lm
Front Beam	**Standard**	**Al. 80x130mm**		
	to	Al. 100x150mm	€ 35	lm
		St. 100x150x3mm	€ 130	lm
		St. 100x150x5mm	€ 186	lm
		St. 100x200x3mm	€ 133	lm
		St. 100x200x5mm	€ 233	lm
Front Pillar	**PILLAR GROUP**			
	Standart:	**St. 150x150x3mm**		
	to	St.150x150x5mm	367€	lm

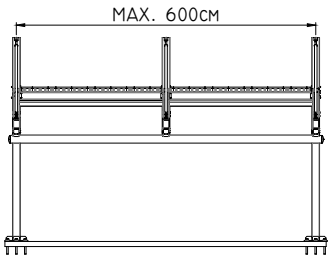

- The product produces as 3 mm steel beam and pillar.
- The front beam can't produces as a steel.
- With pillar reduction applications, Back Half Pillar must be installed at the back of each rail shaft.
- In standard applications 1 back pillar St. 150x150x3mm should be added to each rail shaft.
- When pillar reduction is applied, steel pillars should be 150x150x5 mm.
- Ground flanges are 380x380x15 mm

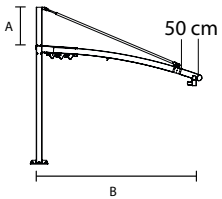

- Max. pillar length: 480 cm

STANDARD "A" VALUES

B (cm)	350	400	450	500	550	600
A (cm)	50	60	70	80	90	100

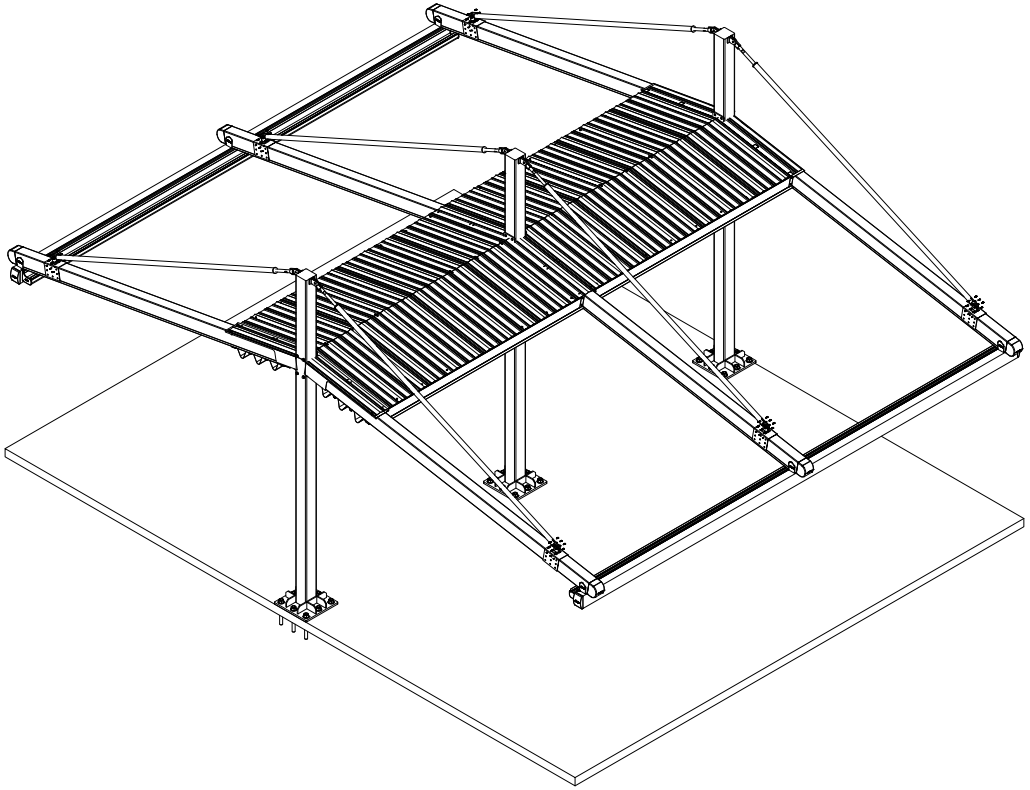

MARIN

I N D E X

PRODUCT FORMS

- **MARINE PLUS** Twin

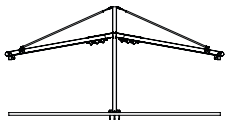

- **MARINE COMPACT** Twin

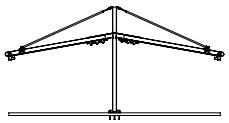

MARIN

PLUS
Twin

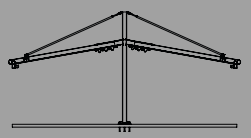

MAXIMUM DIMENSIONS

	WIDTH	PROJECTION
2 RAILS	450 cm	1200 cm
3 RAILS	900 cm	1200 cm
4 RAILS	1300 cm	1200 cm

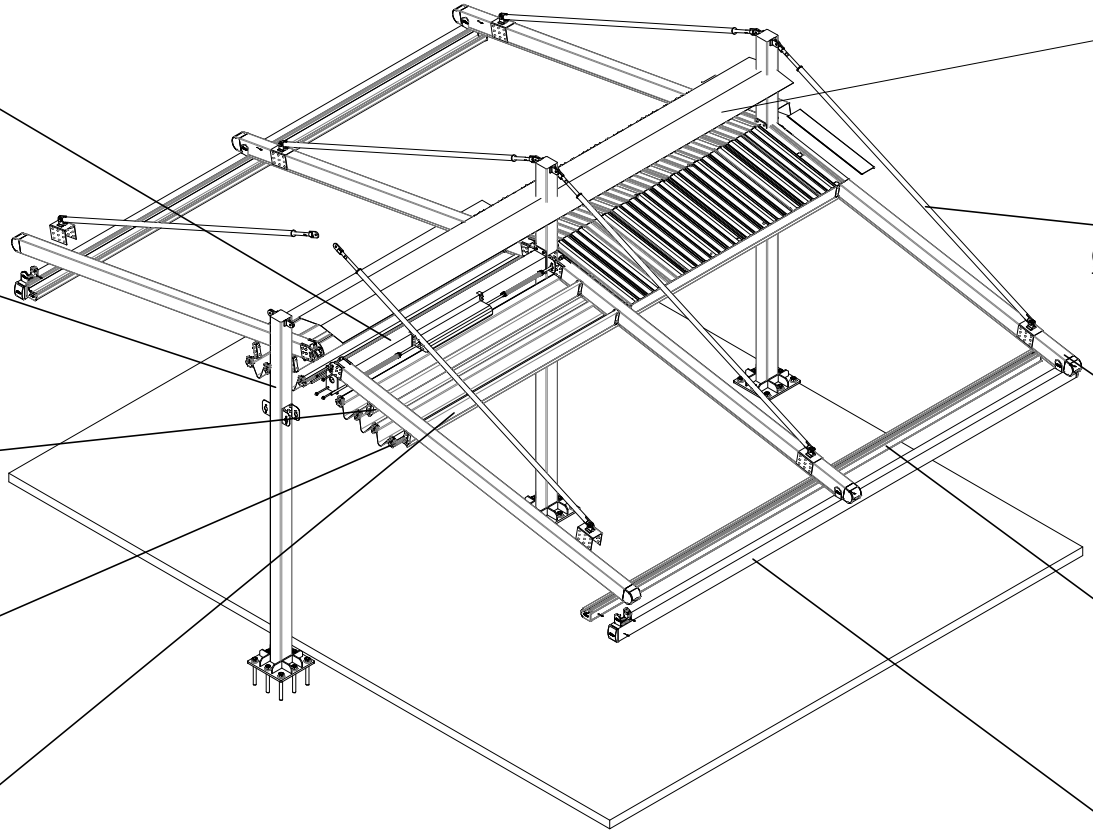

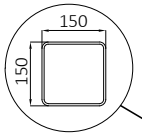

DMR.PRF.G1021
Back Beam

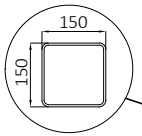

DMR.PRF.G1021
Back Pillar

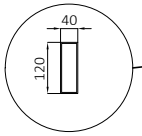

ALM.PRF.G1019
Cross Beam

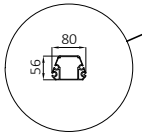

ALM.PRF.P1030
Fabric Support Profile (Double)

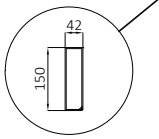

ALM.PRF.G1012
Front Cross Beam

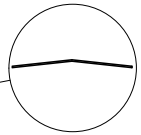

ALM.LVH.G6006
Top Cover

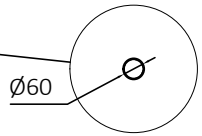

DMR.PRF.G2002
Hanging Pipe

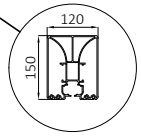

ALM.PRF.P1003
Rail Profile

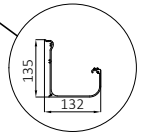

ALM.PRF.P1007
Gutter

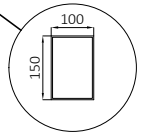

ALM.PRF.G1003
Front Beam

TECHNICAL FEATURES

COLLECTED FABRIC DIMENSIONS

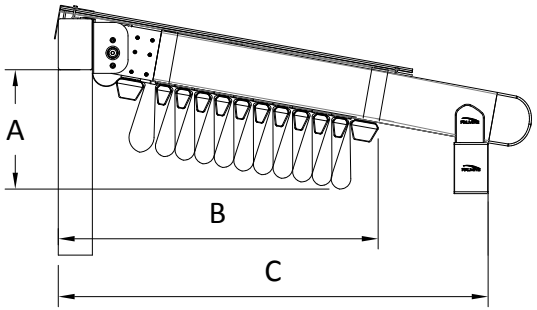

No of Fabric Support Profiles	Projection cm									
	185	235	284	334	383	433	482	532	581	C
4	35									66
5		36								73
6			37							79
7				38						86
8					39					92
9						40				99
10							41			105
11								42		112
12									43	118
	←				A				→	B

*Calculated according to a slope of 15%

DRAINAGE CALCULATION

Type	Max. m²
Full	39 m²/pc
Half	18 m²/pc

* per drainage

There should be at least one drainage, each 8 m length gutter.

MINIMUM SLOPE CHART

Projection	Slope										
	6,4-7,9%	7,4-8,8%	8,4-9,7%	9,4-10,8%	10,4-12%	11,2-12,7%	12-13,4%	13-14,5%	14-15,7%	15-16,6%	16-17,6%
	Rail Center										
	200	**225**	**250**	**275**	**300**	**325**	**350**	**375**	**400**	**425**	**450**
250	16	19	21	24	26	28	30	33	35	38	40
300	20	23	26	29	31	34	37	40	42	45	48
350	23	27	30	34	37	40	43	46	49	53	56
400	27	31	35	39	42	46	49	53	57	61	64
450	32	36	40	44	48	52	56	60	64	69	73
500	36	41	45	50	54	59	63	68	72	77	81
550	40	45	50	55	60	65	70	75	80	85	90
600	44	50	55	61	66	72	77	83	88	94	99

For back height of system 30 cm should be added to slope value.

*Note: Max. slope can be up to 20%

WIND RESISTANCE

PROJECTION (cm)	WIDTH (cm)																	
	450	**500**	**550**	**600**	**650**	**700**	**750**	**800**	**850**	**900**	**950**	**1000**	**1050**	**1100**	**1150**	**1200**	**1250**	**1300**
800	10	10	10	9	9	9	9	9	8	8	9	9	9	9	9	9	8	8
900	9	9	9	9	8	8	8	8	7	7	8	8	8	8	8	8	7	7
1000	8	8	8	8	7	7	7	7	7	6	7	7	7	7	7	7	7	6
1100	7	7	7	7	6	6	6	6	6	6	6	6	6	6	6	6	6	6
1200	7	6	6	6	6	6	6	6	5	5	6	6	6	6	6	6	5	5

All sides open

*The values are given according to the Beaufort scale.

**Calculated for Products with a front height of 250 cm according to Eurocode EN 1991-1-4 Terrain Category 4.

*** You can ask for new calculations for special designs.

MARINE PLUS Twin

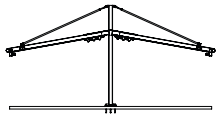

Width

	2 RAILS					3 RAILS									4 RAILS								FS4	FS9	FS9-S
	250 cm	300 cm	350 cm	400 cm	450 cm	500 cm	550 cm	600 cm	650 cm	700 cm	750 cm	800 cm	850 cm	900 cm	950 cm	1000 cm	1050 cm	1100 cm	1150 cm	1200 cm	1250 cm	1300 cm			
400 cm	€ 9.406	€ 9.865	€ 10.510	€ 11.168	€ 11.627	€ 13.660	€ 14.108	€ 14.556	€ 15.408	€ 15.785	€ 16.099	€ 16.541	€ 16.987	€ 17.433	€ 19.676	€ 20.116	€ 20.560	€ 21.004	€ 21.449	€ 21.793	€ 22.387	€ 23.075	€ 1.040	€ 274	399 €
450 cm	€ 9.612	€ 10.194	€ 10.832	€ 11.398	€ 11.863	€ 13.994	€ 14.573	€ 15.027	€ 15.766	€ 16.150	€ 16.472	€ 17.044	€ 17.622	€ 17.952	€ 20.157	€ 20.606	€ 21.179	€ 21.630	€ 22.082	€ 22.432	€ 23.037	€ 23.731	€ 1.116	€ 305	449 €
500 cm	€ 9.817	€ 10.522	€ 11.151	€ 11.627	€ 12.098	€ 14.326	€ 15.036	€ 15.497	€ 16.124	€ 16.515	€ 16.845	€ 17.548	€ 18.253	€ 18.469	€ 20.637	€ 21.093	€ 21.797	€ 22.253	€ 22.715	€ 23.070	€ 23.684	€ 24.384	€ 1.192	€ 336	499 €
550 cm	€ 10.181	€ 10.927	€ 11.596	€ 12.113	€ 12.626	€ 14.999	€ 15.750	€ 16.254	€ 16.923	€ 17.352	€ 17.725	€ 18.469	€ 19.219	€ 19.478	€ 21.761	€ 22.261	€ 23.007	€ 23.505	€ 24.008	€ 24.400	€ 25.055	€ 25.796	€ 1.269	€ 367	549 €
600 cm	€ 10.544	€ 11.332	€ 12.042	€ 12.600	€ 13.154	€ 15.672	€ 16.464	€ 17.012	€ 17.722	€ 18.189	€ 18.606	€ 19.391	€ 20.185	€ 20.487	€ 22.884	€ 23.428	€ 24.217	€ 24.756	€ 25.303	€ 25.730	€ 26.426	€ 27.207	€ 1.345	€ 398	598 €
650 cm	€ 10.873	€ 11.553	€ 12.270	€ 12.950	€ 13.513	€ 16.136	€ 16.817	€ 17.494	€ 18.213	€ 18.685	€ 19.109	€ 19.905	€ 20.711	€ 21.015	€ 23.621	€ 24.172	€ 24.849	€ 25.395	€ 26.070	€ 26.504	€ 27.208	€ 27.877	€ 1.421	€ 429	648 €
700 cm	€ 11.204	€ 11.775	€ 12.500	€ 13.303	€ 13.873	€ 16.602	€ 17.171	€ 17.976	€ 18.707	€ 19.182	€ 19.615	€ 20.421	€ 21.239	€ 21.544	€ 24.358	€ 24.917	€ 25.481	€ 26.036	€ 26.838	€ 27.279	€ 27.992	€ 28.549	€ 1.497	€ 460	698 €
750 cm	€ 11.419	€ 11.998	€ 12.731	€ 13.542	€ 14.120	€ 16.947	€ 17.524	€ 18.337	€ 19.074	€ 19.558	€ 20.000	€ 20.812	€ 21.633	€ 21.954	€ 24.855	€ 25.422	€ 25.994	€ 26.558	€ 27.367	€ 27.814	€ 28.534	€ 29.099	€ 1.574	€ 491	748 €
800 cm	€ 11.634	€ 12.219	€ 12.961	€ 13.780	€ 14.367	€ 17.290	€ 17.875	€ 18.697	€ 19.441	€ 19.933	€ 20.383	€ 21.202	€ 22.028	€ 22.362	€ 25.350	€ 25.926	€ 26.505	€ 27.077	€ 27.895	€ 28.348	€ 29.077	€ 29.650	€ 1.650	€ 522	798 €
850 cm	€ 11.856	€ 12.450	€ 13.198	€ 14.026	€ 14.619	€ 17.647	€ 18.239	€ 19.070	€ 19.821	€ 20.321	€ 20.779	€ 21.605	€ 22.439	€ 22.780	€ 25.859	€ 26.443	€ 27.028	€ 27.610	€ 28.438	€ 28.894	€ 29.631	€ 30.213	€ 1.726	€ 553	848 €
900 cm	€ 12.076	€ 12.678	€ 13.436	€ 14.270	€ 14.872	€ 18.002	€ 18.604	€ 19.442	€ 20.202	€ 20.708	€ 21.174	€ 22.009	€ 22.852	€ 23.199	€ 26.368	€ 26.960	€ 27.552	€ 28.144	€ 28.979	€ 29.440	€ 30.186	€ 30.775	€ 1.803	€ 584	898 €
950 cm	€ 12.295	€ 12.904	€ 13.668	€ 14.512	€ 15.121	€ 18.351	€ 18.959	€ 19.806	€ 20.576	€ 21.086	€ 21.561	€ 22.404	€ 23.257	€ 23.610	€ 26.869	€ 27.468	€ 28.069	€ 28.668	€ 29.511	€ 29.979	€ 30.733	€ 31.330	€ 1.879	€ 615	948 €
1000 cm	€ 12.510	€ 13.128	€ 13.901	€ 14.752	€ 15.369	€ 18.699	€ 19.313	€ 20.168	€ 20.948	€ 21.464	€ 21.947	€ 22.798	€ 23.662	€ 24.022	€ 27.367	€ 27.976	€ 28.584	€ 29.190	€ 30.041	€ 30.517	€ 31.279	€ 31.885	€ 1.955	€ 646	997 €
1050 cm	€ 12.726	€ 13.352	€ 14.133	€ 14.991	€ 15.617	€ 19.047	€ 19.667	€ 20.531	€ 21.320	€ 21.842	€ 22.333	€ 23.193	€ 24.066	€ 24.433	€ 27.865	€ 28.484	€ 29.099	€ 29.712	€ 30.572	€ 31.055	€ 31.825	€ 32.439	€ 2.040	€ 678	1.047 €
1100 cm	€ 12.942	€ 13.576	€ 14.365	€ 15.231	€ 15.865	€ 19.396	€ 20.022	€ 20.893	€ 21.692	€ 22.220	€ 22.720	€ 23.588	€ 24.470	€ 24.844	€ 28.364	€ 28.992	€ 29.614	€ 30.234	€ 31.102	€ 31.592	€ 32.371	€ 32.993	€ 2.126	€ 709	1.097 €
1150 cm	€ 13.158	€ 13.800	€ 14.598	€ 15.471	€ 16.113	€ 19.744	€ 20.376	€ 21.256	€ 22.064	€ 22.598	€ 23.106	€ 23.982	€ 24.874	€ 25.256	€ 28.862	€ 29.500	€ 30.130	€ 30.757	€ 31.633	€ 32.130	€ 32.917	€ 33.548	€ 2.210	€ 742	1.147 €
1200 cm	€ 13.374	€ 14.025	€ 14.830	€ 15.710	€ 16.361	€ 20.092	€ 20.730	€ 21.618	€ 22.436	€ 22.976	€ 23.492	€ 24.377	€ 25.278	€ 25.667	€ 29.361	€ 30.008	€ 30.645	€ 31.279	€ 32.163	€ 32.668	€ 33.463	€ 34.102	€ 2.295	€ 773	1.197 €

FS3	€ 298	€ 312	€ 341	€ 374	€ 405	€ 436	€ 467	€ 498	€ 529	€ 560	€ 720	€ 751	€ 782	€ 813	€ 847	€ 878	€ 908	€ 939	€ 970	€ 1.001	€ 1.032	€ 1.063
FS5-A	€ 55	€ 69	€ 81	€ 93	€ 107	€ 119	€ 134	€ 145	€ 160	€ 172	€ 186	€ 198	€ 212	€ 224	€ 238	€ 250	€ 265	€ 277	€ 291	€ 303	€ 317	€ 329
FS5-E	€ 76	€ 95	€ 112	€ 128	€ 148	€ 164	€ 184	€ 200	€ 220	€ 236	€ 256	€ 273	€ 292	€ 309	€ 328	€ 345	€ 364	€ 381	€ 401	€ 417	€ 437	€ 453

FS3	Gutter System (for both direction)
FS5-A	Additional Fabric Support Profile (Standard) (for both direction)
FS5-E	Additional Fabric Support Profile (3 Axis) (for both direction)
FS4	Additional Rail for PLUS Series - Al. - 120x150mm
FS8	Lighting System
FS9-S	Side Beam for PLUS Series - Al. - 100x150mm (Special)

FS8		LED TYPE & MODULE		
		2 LED	3 LED	4 LED
FS8-S	SPOT	€ 125	€ 152	€ 179
FS8-L	LINEAR	€ 179	€ 233	-
FS8-E	3 AXIS	€ 206	€ 268	-

* FS9 Side Beam (Al. 50x150mm) is included in the price. For other option which is 100x150mm Al. Special side beam is extra cost.
* FS Flexy Plain/3D or Stam 6002 is included in the price
* Motor and Remote control is included in the price
* RAL Colours specified in Aluminium coating catalogue are included in price. Any other RAL colours which are existing in our Supplier's stock can be applied without extra cost.
* Standard colours are RAL9010, RAL7040, RAL1013, RAL7046, RAL9004, RAL3022, RAL120-2, RAL7036, RAL8019, RAL120-5, RAL8025, RAL4001, RAL620-3, RAL5008
* Painting cost has to be min. 125€
* Plastic parts coloured only specified colours

DEDUCTIONS

Price deduction can apply only front pillars, back pillars and side beam. The price of the front pillar, back pillar and side beam can be deducted from options price.

OPTIONS

FS10-150ST3	Extra pillar (150x150x3mm St.)	€ 748	pcs
FS10-150ST5	Extra pillar (150x150x5mm St.)	€ 1.116	pcs
FS11	Deco ceiling cover	€ 46	m^2
FS12	Izo-Pro ceiling cover (up to 800 cm width)	€ 39	m^2
FS15	Side beam pillar (50x100mm - Al)	€ 174	pcs
FS15-B	Side beam pillar (100x100mm - Al)	€ 335	pcs
FS16	Wood effect (*Price difference for standart patterns (up to 700cm projection) (*Can not be applied to steel construction or freestanding products with base plate.)	10% of product price	
FS19	Fix louver	€ 46	lm
FS24	W96 Ceiling Cover	€ 53	m^2
FS25	Fabric support profile special color	€ 11	m^2
FS26	Exclusive fabric difference	€ 31	m^2
FS27	3 Axis lighting fabric support profile difference	€ 9	m^2
FS28-1	Stainless steel chain - 100 cm	€ 46	1m
FS28-2	Stainless steel chain - 200 cm	€ 89	2m
FS28-3	Stainless steel chain - 300 cm	€ 134	3m
FS29-1	Sun Sensor (SUNIS) (with Universal Receiver, it's included in the price)	€ 596	pcs
FS29-2	Wind Sensor (EOLIS RTS) (with Universal Receiver, it's included in the price)	€ 367	pcs
FS29-3	Sun and Wind Sensor (SOLIRIS) (with Universal Receiver, it's included in the price)	€ 459	pcs
FS30	CONNEXOON	€246	pcs
FS31-1	Remote Control - PURE - Telis 1	€55	pcs
FS31-4	Remote Control - PURE - Telis 4	€93	pcs
FS31-16	Remote Control - PURE - Telis 16	€264	pcs
FS32-1	Remote Control - PATIO - Telis 1	€76	pcs
FS32-4	Remote Control - PATIO - Telis 4	€123	pcs
FS33-1	Remote Control - LOUNGE - Telis 1	€93	pcs
FS33-4	Remote Control - LOUNGE - Telis 4	€133	pcs
FS34-1	Remote Control - MODULIS PURE - Telis 1	€125	pcs
FS34-4	Remote Control - MODULIS PURE - Telis 4	€192	pcs
FS35-1	Remote Control - MODULIS LOUNGE - Telis 1	€144	pcs
FS35-4	Remote Control - MODULIS LOUNGE - Telis 4	€220	pcs

*** Can't apply a sensor to the single motor product. For further information please contact with PALMIYE**

EXTENSIONS

Rail	PLUS - 120x150mm	€ 209	lm
Beam	Al. 42x150mm	€ 65	lm
Beam	Al. 50x150mm	€ 115	lm
Beam	Al. 100x150mm	€ 96	lm
Beam	St. 100x150x3mm	€ 190	lm
Beam	St. 100x150x5mm	€ 246	lm
Beam	St. 100x200x3mm	€ 193	lm
Beam	St. 100x200x5mm	€ 293	lm
Fabric protection cover	Al. - 63x___cm	€ 37	m^2
Gutter	Special Profile	€ 28	lm
Pillar	St. 150x150x3mm	€ 261	lm
Pillar	St. 150x150x5mm	€ 390	lm

* Max. St 5mm front pillar height is 480cm

PRICE DIFFERENCE

	BEAM GROUP			
Back Beam	**Standard**	St. 150x150x3mm		
	to	St. 150x150x5mm	€ 95	lm
Front Beam	**Standard**	**Al. 100x150mm**		
	to	St. 100x150x3mm	€ 95	lm
		St. 100x150x5mm	€ 151	lm
		St. 100x200x3mm	€ 98	lm
		St. 100x200x5mm	€ 197	lm
	PILLAR GROUP			
Front Pillar	**Standart:**	**St. 150x150x3mm**		
	to	St.150x150x5mm	367€	lm

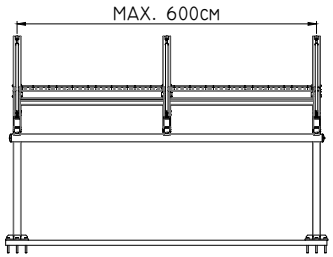

- The product produces as 3 mm steel beam and pillar.
- The front beam can't produces as a steel.
- With pillar reduction applications, Back Half Pillar must be installed at the back of each rail shaft.
- In standard applications 1 back pillar St. 150x150x3mm should be added to each rail shaft.
- When pillar reduction is applied, steel pillars should be 150x150x5 mm.
- Ground flanges are 380x380x15 mm

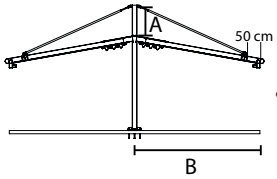

- Max. pillar length: 480 cm

STANDARD "A" VALUES

B (cm)	350	400	450	500	550	600
A (cm)	50	60	70	80	90	100

MARTIN

COMPACT
Twin

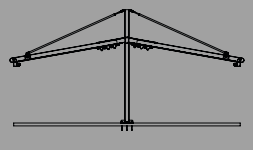

MAXIMUM DIMENSIONS

	WIDTH	PROJECTION
2 RAILS	450 cm	1200 cm
3 RAILS	900 cm	1200 cm
4 RAILS	1300 cm	1200 cm

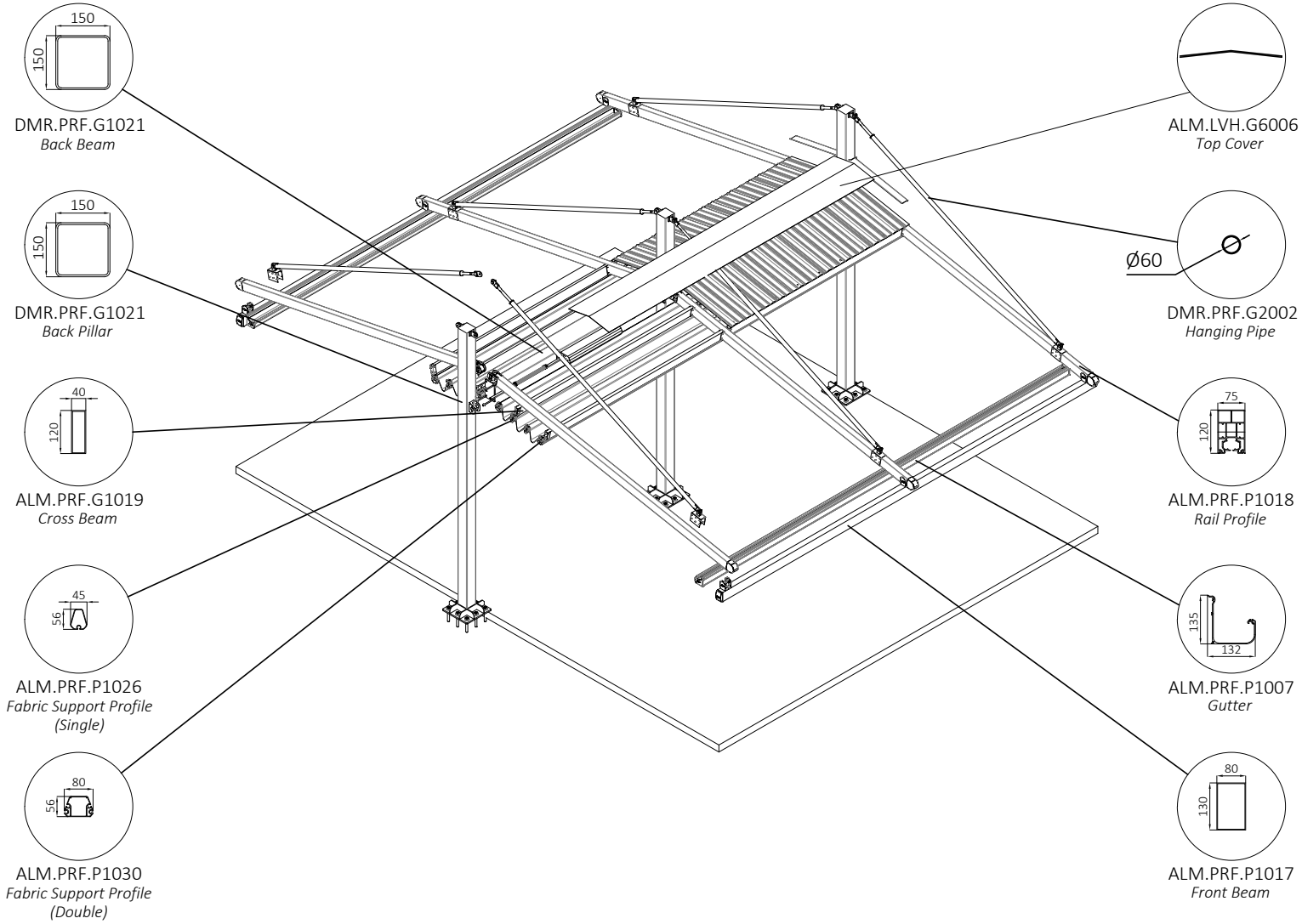

TECHNICAL FEATURES

COLLECTED FABRIC DIMENSIONS

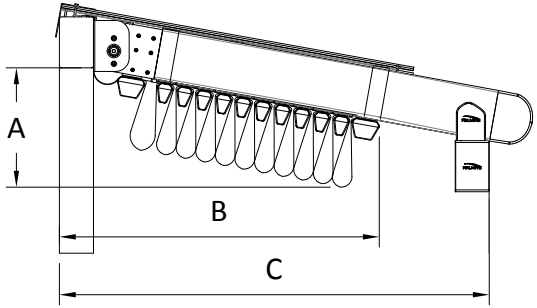

No of Fabric Support Profiles	Projection cm									
	185	235	284	334	383	433	482	532	581	C
4	35									66
5		36								73
6			37							79
7				38						86
8					39					92
9						40				99
10							41			105
11								42		112
12									43	118
					A					B

*Calculated according to a slope of 15%

DRAINAGE CALCULATION

Type	Max. m²
COMPACT	30 m²/pc

* per drainage

There should be at least one drainage, each 8 m length gutter.

MINIMUM SLOPE CHART

Projection	Slope										
	6,4-7,9%	7,4-8,8%	8,4-9,7%	9,4-10,8%	10,4-12%	11,2-12,7%	12-13,4%	13-14,5%	14-15,7%	15-16,6%	16-17,6%
	Rail Center										
	200	**225**	**250**	**275**	**300**	**325**	**350**	**375**	**400**	**425**	**450**
250	11	14	16	19	21	23	25	28	30	33	35
300	15	18	21	24	26	29	32	35	37	40	43
350	18	22	25	29	32	35	38	41	44	48	51
400	22	26	30	34	37	41	44	48	52	56	59
450	27	31	35	39	43	47	51	55	59	64	68
500	31	36	40	45	49	54	58	63	67	72	76
550	35	40	45	50	55	60	65	70	75	80	85
600	39	45	50	56	61	67	72	78	83	89	94

For back height of system 25 cm should be added to slope value.

*Note: Max. slope can be up to 25%

WIND RESISTANCE

PROJECTION (cm)	WIDTH (cm)																	
	450	**500**	**550**	**600**	**650**	**700**	**750**	**800**	**850**	**900**	**950**	**1000**	**1050**	**1100**	**1150**	**1200**	**1250**	**1300**
400	11	11	11	11	11	11	11	10	10	10	11	11	11	11	10	10	10	10
500	11	11	10	10	10	10	9	9	9	9	10	10	10	9	9	9	9	9
600	10	10	10	9	9	9	8	8	8	8	9	9	9	8	8	8	8	8
700	9	9	9	8	8	8	7	7	7	7	8	8	8	7	7	7	7	7
800	9	9	8	7	7	7	7	7	7	6	7	7	7	7	7	7	7	6
900	7	7	7	6	6	6	6	6	6	5	6	6	6	6	6	6	6	5
1000	6	6	6	6	6	6	6	5	5	5	6	6	6	6	5	5	5	5
1100	5	5	5	5	5	5	5	5	5	5	5	5	5	5	5	5	5	5
1200	5	5	5	5	5	5	5	4	4	4	5	5	5	5	4	4	4	4

All sides open

*The values are given according to the Beaufort scale.

**Calculated for Products with a front height of 250 cm according to Eurocode EN 1991-1-4 Terrain Category 4.

*** You can ask for new calculations for special designs.

MARIN COMPACT Twin

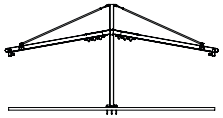

Width

Projection

	2 RAILS					3 RAILS									4 RAILS								FS4 FS10-C	FS9-C
	250 cm	300 cm	350 cm	400 cm	450 cm	500 cm	550 cm	600 cm	650 cm	700 cm	750 cm	800 cm	850 cm	900 cm	950 cm	1000 cm	1050 cm	1100 cm	1150 cm	1200 cm	1250 cm	1300 cm		
400 cm	€ 7.621	€ 7.990	€ 8.510	€ 9.040	€ 9.409	€ 11.051	€ 11.410	€ 11.769	€ 12.453	€ 12.755	€ 13.004	€ 13.357	€ 13.713	€ 14.069	€ 15.873	€ 16.223	€ 16.577	€ 16.929	€ 17.282	€ 17.554	€ 18.027	€ 18.575	€ 858	€ 226
450 cm	€ 7.780	€ 8.249	€ 8.762	€ 9.218	€ 9.591	€ 11.310	€ 11.774	€ 12.137	€ 12.731	€ 13.037	€ 13.292	€ 13.750	€ 14.211	€ 14.473	€ 16.246	€ 16.602	€ 17.059	€ 17.416	€ 17.775	€ 18.051	€ 18.532	€ 19.084	€ 921	€ 252
500 cm	€ 7.939	€ 8.506	€ 9.012	€ 9.393	€ 9.771	€ 11.567	€ 12.136	€ 12.504	€ 13.006	€ 13.318	€ 13.580	€ 14.142	€ 14.706	€ 14.875	€ 16.616	€ 16.978	€ 17.539	€ 17.901	€ 18.266	€ 18.546	€ 19.034	€ 19.590	€ 984	€ 277
550 cm	€ 8.224	€ 8.825	€ 9.362	€ 9.777	€ 10.187	€ 12.098	€ 12.700	€ 13.102	€ 13.637	€ 13.979	€ 14.275	€ 14.870	€ 15.469	€ 15.672	€ 17.504	€ 17.900	€ 18.494	€ 18.889	€ 19.287	€ 19.595	€ 20.116	€ 20.704	€ 1.047	€ 303
600 cm	€ 8.510	€ 9.143	€ 9.712	€ 10.159	€ 10.603	€ 12.629	€ 13.262	€ 13.700	€ 14.267	€ 14.639	€ 14.970	€ 15.596	€ 16.230	€ 16.467	€ 18.389	€ 18.820	€ 19.448	€ 19.874	€ 20.307	€ 20.643	€ 21.195	€ 21.815	€ 1.110	€ 329
650 cm	€ 8.767	€ 9.312	€ 9.886	€ 10.431	€ 10.881	€ 12.989	€ 13.533	€ 14.074	€ 14.648	€ 15.023	€ 15.359	€ 15.993	€ 16.636	€ 16.875	€ 18.962	€ 19.398	€ 19.935	€ 20.367	€ 20.902	€ 21.243	€ 21.801	€ 22.330	€ 1.172	€ 354
700 cm	€ 9.024	€ 9.481	€ 10.062	€ 10.705	€ 11.160	€ 13.351	€ 13.805	€ 14.447	€ 15.030	€ 15.407	€ 15.750	€ 16.392	€ 17.043	€ 17.283	€ 19.534	€ 19.976	€ 20.422	€ 20.860	€ 21.496	€ 21.842	€ 22.406	€ 22.845	€ 1.235	€ 380
750 cm	€ 9.189	€ 9.651	€ 10.238	€ 10.886	€ 11.347	€ 13.615	€ 14.074	€ 14.723	€ 15.310	€ 15.693	€ 16.043	€ 16.689	€ 17.342	€ 17.594	€ 19.913	€ 20.361	€ 20.812	€ 21.257	€ 21.898	€ 22.249	€ 22.817	€ 23.262	€ 1.298	€ 405
800 cm	€ 9.352	€ 9.820	€ 10.412	€ 11.067	€ 11.534	€ 13.877	€ 14.342	€ 14.997	€ 15.589	€ 15.979	€ 16.334	€ 16.985	€ 17.641	€ 17.903	€ 20.289	€ 20.743	€ 21.200	€ 21.651	€ 22.298	€ 22.653	€ 23.228	€ 23.679	€ 1.361	€ 431
850 cm	€ 9.521	€ 9.994	€ 10.592	€ 11.253	€ 11.726	€ 14.149	€ 14.620	€ 15.281	€ 15.878	€ 16.273	€ 16.634	€ 17.290	€ 17.953	€ 18.220	€ 20.675	€ 21.136	€ 21.597	€ 22.055	€ 22.709	€ 23.066	€ 23.647	€ 24.104	€ 1.424	€ 456
900 cm	€ 9.688	€ 10.168	€ 10.772	€ 11.437	€ 11.916	€ 14.420	€ 14.897	€ 15.563	€ 16.166	€ 16.567	€ 16.934	€ 17.596	€ 18.264	€ 18.536	€ 21.061	€ 21.528	€ 21.993	€ 22.459	€ 23.118	€ 23.479	€ 24.065	€ 24.527	€ 1.487	€ 482
950 cm	€ 9.853	€ 10.339	€ 10.947	€ 11.620	€ 12.104	€ 14.685	€ 15.166	€ 15.839	€ 16.449	€ 16.852	€ 17.226	€ 17.894	€ 18.570	€ 18.846	€ 21.440	€ 21.912	€ 22.384	€ 22.854	€ 23.519	€ 23.884	€ 24.477	€ 24.945	€ 1.550	€ 508
1000 cm	€ 10.016	€ 10.508	€ 11.122	€ 11.800	€ 12.290	€ 14.948	€ 15.434	€ 16.112	€ 16.730	€ 17.137	€ 17.517	€ 18.191	€ 18.874	€ 19.155	€ 21.816	€ 22.294	€ 22.772	€ 23.247	€ 23.917	€ 24.288	€ 24.887	€ 25.361	€ 1.613	€ 533
1050 cm	€ 10.179	€ 10.677	€ 11.298	€ 11.980	€ 12.476	€ 15.212	€ 15.702	€ 16.386	€ 17.011	€ 17.422	€ 17.808	€ 18.488	€ 19.177	€ 19.464	€ 22.191	€ 22.677	€ 23.160	€ 23.640	€ 24.316	€ 24.692	€ 25.297	€ 25.777	€ 1.676	€ 559
1100 cm	€ 10.342	€ 10.846	€ 11.473	€ 12.160	€ 12.663	€ 15.476	€ 15.970	€ 16.660	€ 17.291	€ 17.707	€ 18.099	€ 18.785	€ 19.481	€ 19.773	€ 22.567	€ 23.060	€ 23.547	€ 24.033	€ 24.715	€ 25.096	€ 25.707	€ 26.193	€ 1.740	€ 584
1150 cm	€ 10.505	€ 11.015	€ 11.648	€ 12.340	€ 12.849	€ 15.739	€ 16.238	€ 16.934	€ 17.572	€ 17.992	€ 18.390	€ 19.082	€ 19.785	€ 20.082	€ 22.943	€ 23.443	€ 23.935	€ 24.426	€ 25.114	€ 25.500	€ 26.117	€ 26.609	€ 1.801	€ 610
1200 cm	€ 10.668	€ 11.184	€ 11.823	€ 12.520	€ 13.035	€ 16.003	€ 16.506	€ 17.207	€ 17.853	€ 18.277	€ 18.681	€ 19.379	€ 20.089	€ 20.391	€ 23.319	€ 23.825	€ 24.323	€ 24.819	€ 25.513	€ 25.904	€ 26.527	€ 27.025	€ 1.865	€ 635

FS3	€ 298	€ 312	€ 341	€ 374	€ 405	€ 436	€ 467	€ 498	€ 529	€ 560	€ 720	€ 751	€ 782	€ 813	€ 847	€ 878	€ 908	€ 939	€ 970	€ 1.001	€ 1.032	€ 1.063
FS5-A	€ 55	€ 69	€ 81	€ 93	€ 107	€ 119	€ 134	€ 145	€ 160	€ 172	€ 186	€ 198	€ 212	€ 224	€ 238	€ 250	€ 265	€ 277	€ 291	€ 303	€ 317	€ 329
FS5-E	€ 76	€ 95	€ 112	€ 128	€ 148	€ 164	€ 184	€ 200	€ 220	€ 236	€ 256	€ 273	€ 292	€ 309	€ 328	€ 345	€ 364	€ 381	€ 401	€ 417	€ 437	€ 453

FS3	Gutter System (for both direction)
FS5-A	Additional Fabric Support Profile (Standard) (for both direction)
FS5-E	Additional Fabric Support Profile (3 Axis) (for both direction)
FS4	Additional Rail for COMPACT Series - Al. - 75x120mm (for both direction)
FS8	Lighting System

FS8		LED TYPE & MODULE		
		2 LED	3 LED	4 LED
FS8-S	SPOT	€ 125	€ 152	€ 179
FS8-L	LINEAR	€ 179	€ 233	-
FS8-E	3 AXIS	€ 206	€ 268	-

* FS9 Side Beam is not included in the price
* FS Flexy Plain/3D or Stam 6002 is included in the price
* Motor and Remote control is included in the price
* RAL Colours specified in Aluminium coating catalogue are included in price. Any other RAL colours which are existing in our Supplier's stock can be applied without extra cost.
* Standard colours are RAL9010, RAL7040, RAL1013, RAL7046, RAL9004, RAL3022, RAL120-2, RAL7036, RAL8019, RAL120-5, RAL8025, RAL4001, RAL620-3, RAL5008
* Painting cost has to be min. 125€
* Plastic parts coloured only specified colours

DEDUCTIONS

Price deduction can apply only front pillars, back pillars and side beam. The price of the front pillar, back pillar and side beam can be deducted from options price.

OPTIONS

FS10-150ST3	Extra pillar (150x150x3mm St.)	€ 748	pcs
FS10-150ST5	Extra pillar (150x150x5mm St.)	€ 1.116	pcs
FS11	Deco ceiling cover	€ 46	m^2
FS12	Izo-Pro ceiling cover (up to 800 cm width)	€ 39	m^2
FS15-C	Side beam pillar (80x80mm - Al)	€ 246	pcs
FS16	Wood effect (*Price difference for standart patterns (up to 700cm projection) (*Can not be applied to steel construction or freestanding products with base plate.)	10% of product price	
FS19	Fix louver	€ 46	lm
FS24	W96 Ceiling Cover	€ 53	m^2
FS25	Fabric support profile special color	€ 11	m^2
FS26	Exclusive fabric difference	€ 31	m^2
FS27	3 Axis lighting fabric support profile difference	€ 9	m^2
FS28-1	Stainless steel chain - 100 cm	€ 46	1m
FS28-2	Stainless steel chain - 200 cm	€ 89	2m
FS28-3	Stainless steel chain - 300 cm	€ 134	3m
FS28-4	Stainless steel chain - 400 cm	€ 179	4m
FS29-1	Sun Sensor (SUNIS) (with Universal Receiver, it's included in the price)	€ 596	pcs
FS29-2	Wind Sensor (EOLIS RTS) (with Universal Receiver, it's included in the price)	€ 367	pcs
FS29-3	Sun and Wind Sensor (SOLIRIS) (with Universal Receiver, it's included in the price)	€ 459	pcs
FS30	CONNEXOON	€246	pcs
FS31-1	Remote Control - PURE - Telis 1	€55	pcs
FS31-4	Remote Control - PURE - Telis 4	€93	pcs
FS31-16	Remote Control - PURE - Telis 16	€264	pcs
FS32-1	Remote Control - PATIO - Telis 1	€76	pcs
FS32-4	Remote Control - PATIO - Telis 4	€123	pcs
FS33-1	Remote Control - LOUNGE - Telis 1	€93	pcs
FS33-4	Remote Control - LOUNGE - Telis 4	€133	pcs
FS34-1	Remote Control - MODULIS PURE - Telis 1	€125	pcs
FS34-4	Remote Control - MODULIS PURE - Telis 4	€192	pcs
FS35-1	Remote Control - MODULIS LOUNGE - Telis 1	€144	pcs
FS35-4	Remote Control - MODULIS LOUNGE - Telis 4	€220	pcs

*** Can't apply a sensor to the single motor product. For further information please contact with PALMIYE**

EXTENSIONS

Rail	COMPACT - 75x120mm	€ 128	lm
Beam	Al. 80x130mm	€ 61	lm
Beam	Al. 100x150mm	€ 96	lm
Beam	St. 100x150x3mm	€ 190	lm
Beam	St. 100x150x5mm	€ 246	lm
Beam	St. 100x200x3mm	€ 193	lm
Beam	St. 100x200x5mm	€ 293	lm
Fabric protection cover	Al. - 63x___cm	€ 37	m^2
Gutter	Special Profile	€ 28	lm
Pillar	St. 150x150x3mm	€ 261	lm
Pillar	St. 150x150x5mm	€ 390	lm

* Max. St 5mm front pillar height is 480cm

PRICE DIFFERENCE

BEAM GROUP

Back Beam	**Standard**	St. 150x150x3mm		
	to	St. 150x150x5mm	€ 95	lm
Front Beam	**Standard**	**Al. 80x130mm**		
	to	Al. 100x150mm	€ 35	lm
		St. 100x150x3mm	€ 130	lm
		St. 100x150x5mm	€ 186	lm
		St. 100x200x3mm	€ 133	lm
		St. 100x200x5mm	€ 233	lm

PILLAR GROUP

Front Pillar	**Standart:**	**St. 150x150x3mm**		
	to	St.150x150x5mm	367€	lm

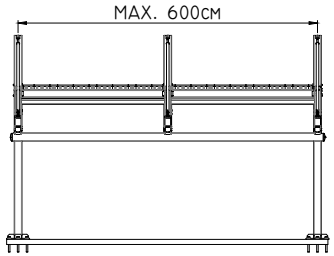

- The product produces as 3 mm steel beam and pillar.
- The front beam can't produces as a steel.
- With pillar reduction applications, Back Half Pillar must be installed at the back of each rail shaft.
- In standard applications 1 back pillar St. 150x150x3mm should be added to each rail shaft.
- When pillar reduction is applied, steel pillars should be 150x150x5 mm.
- Ground flanges are 380x380x15 mm

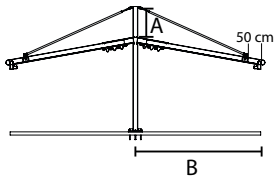

- Max. pillar length: 480 cm

STANDARD "A" VALUES

B (cm)	350	400	450	500	550	600
A (cm)	50	60	70	80	90	100

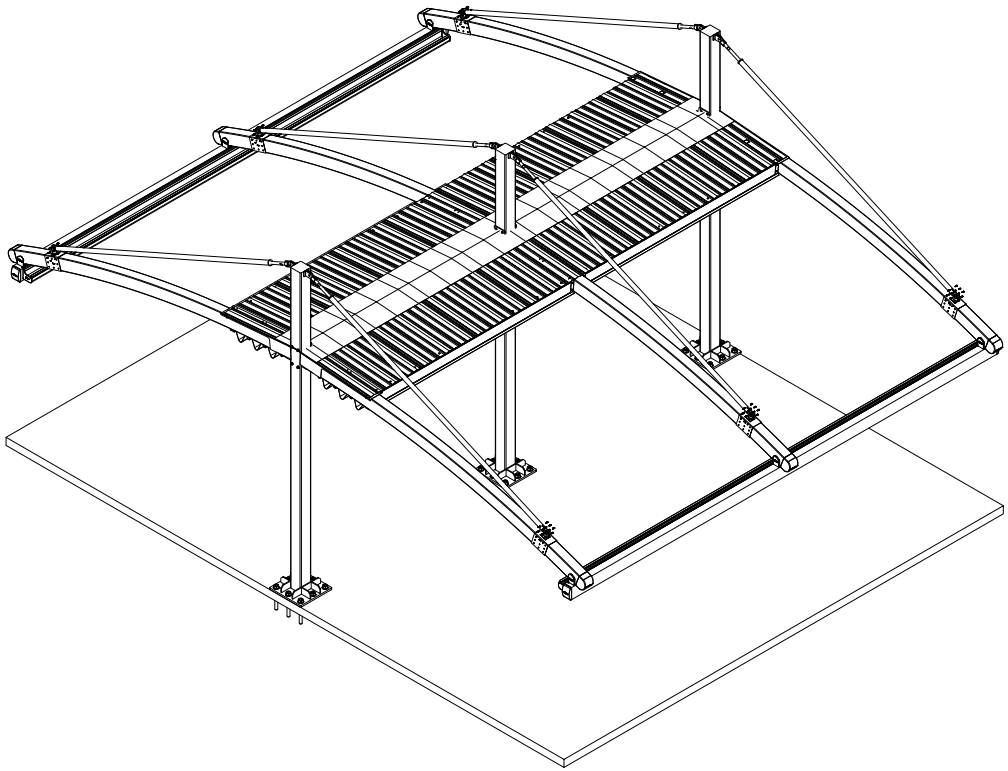

BRIDGE

I N D E X

PRODUCT FORMS

- **BRIDGE PLUS** Twin

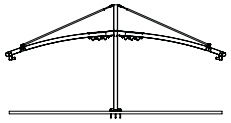

- **BRIDGE COMPACT** Twin

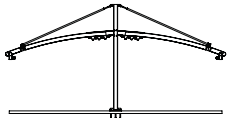

BRIDGE PLUS Twin

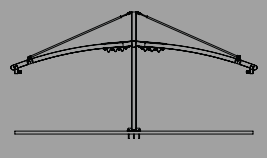

MAXIMUM DIMENSIONS

	WIDTH	PROJECTION
2 RAILS	400 cm	1200 cm
3 RAILS	800 cm	1200 cm
4 RAILS	1200 cm	1200 cm
5 RAILS	1300 cm	1200 cm

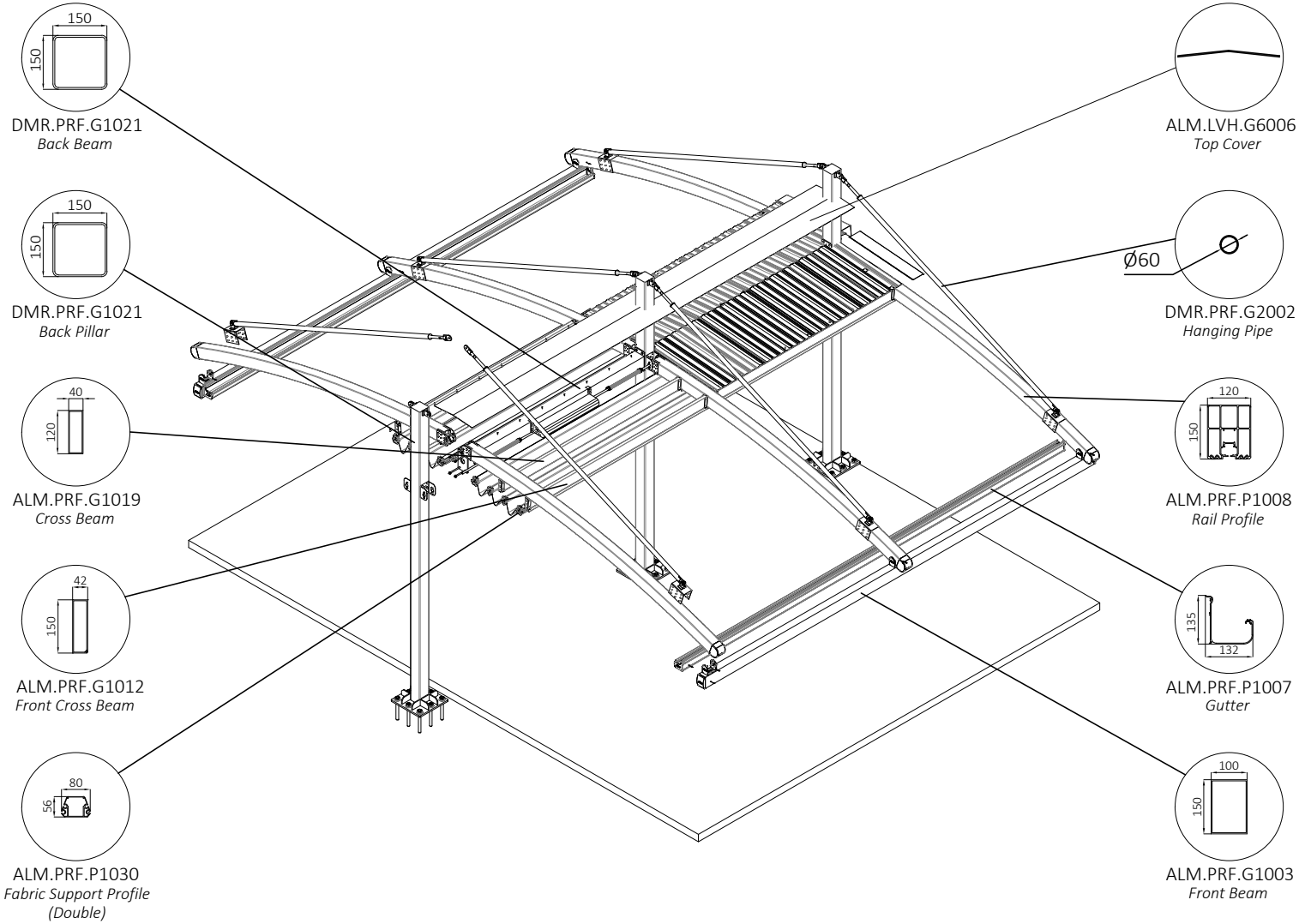

TECHNICAL FEATURES

COLLECTED FABRIC DIMENSIONS

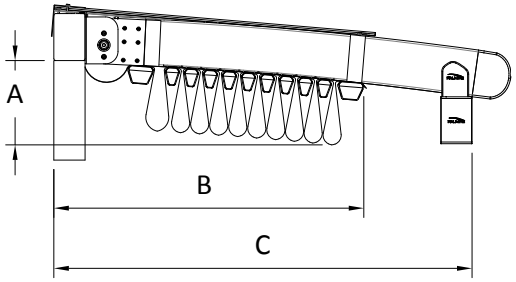

RADIUS CHART

RADIUS	650	850	1500

Projection	A		
300	41		
400	58		
500	81	65	
600		85	
700		109	
800		137	83
900			100
1000			118
1100			139
1200			161

B

*The values are approx. ± 5 cm

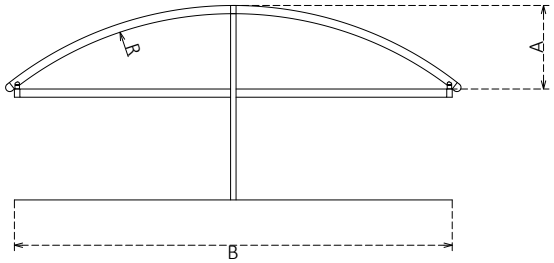

Projection cm

No of Fabric Support Profiles	200	250	300	350	400	450	500	550	600	C
5	30									68
6		31								74
7			32							81
9				34						94
10					35					100
11						36				107
13							38			120
14								39		126
15									40	133
				A						B

PROJECTION (cm)

*Calculated according to a slope of 15%

WIND RESISTANCE

WIDTH (cm)

PROJECTION (cm)	450	500	550	600	650	700	750	800	850	900	950	1000	1050	1100	1150	1200	1250	1300
800	10	10	10	9	9	9	9	9	8	8	9	9	9	9	9	9	8	8
900	9	9	9	9	8	8	8	8	7	7	8	8	8	8	8	8	7	7
1000	8	8	8	8	7	7	7	7	7	6	7	7	7	7	7	7	7	6
1100	7	7	7	7	6	6	6	6	6	6	6	6	6	6	6	6	6	6
1200	7	6	6	6	6	6	6	6	5	5	6	6	6	6	6	6	5	5

All sides open

*The values are given according to the Beaufort scale.

**Calculated for Products with a front height of 250 cm according to Eurocode EN 1991-1-4 Terrain Category 4.

*** You can ask for new calculations for special designs.

DRAINAGE CALCULATION

Type	Max. m²
Full	39 m²/pc
Half	18 m²/pc

* per drainage

There should be at least one drainage, each 8 m length gutter.

BRIDGE PLUS Twin

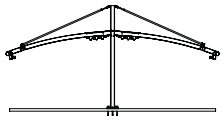

Width

	2 RAILS				3 RAILS								4 RAILS								5 RAILS		FS4	FS9	FS9-S
	250 cm	300 cm	350 cm	400 cm	450 cm	500 cm	550 cm	600 cm	650 cm	700 cm	750 cm	800 cm	850 cm	900 cm	950 cm	1000 cm	1050 cm	1100 cm	1150 cm	1200 cm	1250 cm	1300 cm			
400 cm	€ 10.189	€ 10.648	€ 11.644	€ 12.111	€ 12.570	€ 14.516	€ 15.037	€ 15.503	€ 16.498	€ 16.959	€ 17.525	€ 17.984	€ 18.451	€ 18.910	€ 21.308	€ 21.767	€ 22.234	€ 22.693	€ 23.161	€ 23.620	€ 24.317	€ 25.076	€ 1.040	€ 274	€ 399
450 cm	€ 10.410	€ 11.026	€ 11.884	€ 12.359	€ 12.830	€ 14.890	€ 15.541	€ 16.016	€ 16.873	€ 17.344	€ 17.918	€ 18.535	€ 19.009	€ 19.480	€ 21.816	€ 22.287	€ 22.910	€ 23.381	€ 23.857	€ 24.328	€ 25.033	€ 25.802	€ 1.116	€ 305	€ 449
500 cm	€ 10.630	€ 11.403	€ 12.123	€ 12.606	€ 13.087	€ 15.263	€ 16.044	€ 16.526	€ 17.246	€ 17.729	€ 18.311	€ 19.083	€ 19.566	€ 20.049	€ 22.323	€ 22.805	€ 23.586	€ 24.069	€ 24.551	€ 25.034	€ 25.746	€ 26.527	€ 1.192	€ 336	€ 499
550 cm	€ 11.025	€ 11.844	€ 12.609	€ 13.137	€ 13.667	€ 15.963	€ 16.791	€ 17.319	€ 18.084	€ 18.609	€ 19.241	€ 20.061	€ 20.589	€ 21.117	€ 23.514	€ 24.042	€ 24.869	€ 25.394	€ 25.926	€ 26.455	€ 27.212	€ 28.039	€ 1.269	€ 367	€ 549
600 cm	€ 11.419	€ 12.284	€ 13.096	€ 13.670	€ 14.245	€ 16.664	€ 17.537	€ 18.112	€ 18.923	€ 19.490	€ 20.172	€ 21.037	€ 21.611	€ 22.186	€ 24.705	€ 25.279	€ 26.152	€ 26.718	€ 27.300	€ 27.875	€ 28.680	€ 29.552	€ 1.345	€ 398	€ 598
650 cm	€ 11.789	€ 12.521	€ 13.340	€ 14.071	€ 14.658	€ 17.168	€ 17.901	€ 18.631	€ 19.454	€ 20.032	€ 20.721	€ 21.599	€ 22.181	€ 22.763	€ 25.523	€ 26.106	€ 26.840	€ 27.418	€ 28.154	€ 28.739	€ 29.555	€ 30.286	€ 1.421	€ 429	€ 648
700 cm	€ 12.161	€ 12.758	€ 13.586	€ 14.474	€ 15.071	€ 17.674	€ 18.264	€ 19.152	€ 19.987	€ 20.577	€ 21.273	€ 22.162	€ 22.752	€ 23.341	€ 26.343	€ 26.932	€ 27.529	€ 28.119	€ 29.008	€ 29.605	€ 30.432	€ 31.021	€ 1.497	€ 460	€ 698
750 cm	€ 12.391	€ 12.996	€ 13.834	€ 14.734	€ 15.335	€ 18.030	€ 18.631	€ 19.528	€ 20.373	€ 20.971	€ 21.680	€ 22.575	€ 23.176	€ 23.777	€ 26.867	€ 27.468	€ 28.074	€ 28.675	€ 29.570	€ 30.180	€ 31.014	€ 31.615	€ 1.574	€ 491	€ 748
800 cm	€ 12.620	€ 13.232	€ 14.082	€ 14.994	€ 15.598	€ 18.386	€ 18.999	€ 19.902	€ 20.760	€ 21.364	€ 22.084	€ 22.988	€ 23.601	€ 24.214	€ 27.391	€ 28.004	€ 28.617	€ 29.229	€ 30.132	€ 30.753	€ 31.595	€ 32.208	€ 1.650	€ 522	€ 798
850 cm	€ 12.857	€ 13.481	€ 14.339	€ 15.257	€ 15.878	€ 18.753	€ 19.374	€ 20.289	€ 21.154	€ 21.771	€ 22.498	€ 23.414	€ 24.037	€ 24.657	€ 27.924	€ 28.547	€ 29.172	€ 29.792	€ 30.707	€ 31.335	€ 32.189	€ 32.809	€ 1.726	€ 553	€ 848
900 cm	€ 13.095	€ 13.730	€ 14.596	€ 15.522	€ 16.157	€ 19.121	€ 19.749	€ 20.676	€ 21.549	€ 22.177	€ 22.912	€ 23.838	€ 24.473	€ 25.102	€ 28.456	€ 29.091	€ 29.727	€ 30.355	€ 31.281	€ 31.917	€ 32.782	€ 33.411	€ 1.803	€ 584	€ 898
950 cm	€ 13.325	€ 13.967	€ 14.845	€ 15.783	€ 16.426	€ 19.481	€ 20.121	€ 21.055	€ 21.935	€ 22.575	€ 23.322	€ 24.255	€ 24.903	€ 25.538	€ 28.984	€ 29.631	€ 30.275	€ 30.914	€ 31.849	€ 32.495	€ 33.369	€ 34.008	€ 1.879	€ 615	€ 948
1000 cm	€ 13.554	€ 14.205	€ 15.093	€ 16.042	€ 16.693	€ 19.840	€ 20.491	€ 21.433	€ 22.321	€ 22.972	€ 23.731	€ 24.673	€ 25.331	€ 25.974	€ 29.512	€ 30.170	€ 30.821	€ 31.472	€ 32.414	€ 33.072	€ 33.953	€ 34.604	€ 1.955	€ 646	€ 997
1050 cm	€ 13.782	€ 14.442	€ 15.341	€ 16.301	€ 16.960	€ 20.199	€ 20.862	€ 21.811	€ 22.708	€ 23.369	€ 24.140	€ 25.090	€ 25.759	€ 26.411	€ 30.040	€ 30.709	€ 31.367	€ 32.030	€ 32.979	€ 33.649	€ 34.537	€ 35.200	€ 2.040	€ 678	€ 1.047
1100 cm	€ 14.011	€ 14.679	€ 15.589	€ 16.559	€ 17.227	€ 20.558	€ 21.233	€ 22.189	€ 23.094	€ 23.766	€ 24.549	€ 25.507	€ 26.187	€ 26.847	€ 30.568	€ 31.248	€ 31.913	€ 32.588	€ 33.544	€ 34.226	€ 35.121	€ 35.796	€ 2.126	€ 709	€ 1.097
1150 cm	€ 14.240	€ 14.916	€ 15.837	€ 16.818	€ 17.494	€ 20.917	€ 21.604	€ 22.567	€ 23.480	€ 24.163	€ 24.958	€ 25.924	€ 26.615	€ 27.284	€ 31.096	€ 31.787	€ 32.459	€ 33.146	€ 34.109	€ 34.803	€ 35.706	€ 36.392	€ 2.210	€ 742	€ 1.147
1200 cm	€ 14.469	€ 15.154	€ 16.085	€ 17.077	€ 17.761	€ 21.276	€ 21.974	€ 22.945	€ 23.867	€ 24.560	€ 25.366	€ 26.342	€ 27.043	€ 27.720	€ 31.625	€ 32.326	€ 33.005	€ 33.704	€ 34.674	€ 35.380	€ 36.290	€ 36.989	€ 2.295	€ 773	€ 1.197

FS3	€ 298	€ 312	€ 341	€ 374	€ 405	€ 436	€ 467	€ 498	€ 529	€ 560	€ 720	€ 751	€ 782	€ 813	€ 847	€ 878	€ 908	€ 939	€ 970	€ 1.001	€ 1.032	€ 1.063
FS5-A	€ 55	€ 69	€ 81	€ 93	€ 107	€ 119	€ 134	€ 145	€ 160	€ 172	€ 186	€ 198	€ 212	€ 224	€ 238	€ 250	€ 265	€ 277	€ 291	€ 303	€ 317	€ 329
FS5-E	€ 76	€ 95	€ 112	€ 128	€ 148	€ 164	€ 184	€ 200	€ 220	€ 236	€ 256	€ 273	€ 292	€ 309	€ 328	€ 345	€ 364	€ 381	€ 401	€ 417	€ 437	€ 453

FS3	Gutter System (for both direction)
FS5-A	Additional Fabric Support Profile (Standard) (for both direction)
FS5-E	Additional Fabric Support Profile (3 Axis) (for both direction)
FS4	Additional Rail for PLUS Series - Al. - 120x150mm
FS8	Lighting System
FS9-S	Side Beam for PLUS Series - Al. - 100x150mm (Special)

FS8		LED TYPE & MODULE		
		2 LED	3 LED	4 LED
FS8-S	SPOT	€ 125	€ 152	€ 179
FS8-L	LINEAR	€ 179	€ 233	-
FS8-E	3 AXIS	€ 206	€ 268	-

* FS9 Side Beam (Al. 50x150mm) is included in the price. For other option which is 100x150mm Al. Special side beam is extra cost.
* FS Flexy Plain/3D or Stam 6002 is included in the price
* Motor and Remote control is included in the price
* RAL Colours specified in Aluminium coating catalogue are included in price. Any other RAL colours which are existing in our Supplier's stock can be applied without extra cost.
* Standard colours are RAL9010, RAL7040, RAL1013, RAL7046, RAL9004, RAL3022, RAL120-2, RAL7036, RAL8019, RAL120-5, RAL8025, RAL4001, RAL620-3, RAL5008
* Painting cost has to be min. 125€
* Plastic parts coloured only specified colours

DEDUCTIONS

Price deduction can apply only front pillars, back pillars and side beam. The price of the front pillar, back pillar and side beam can be deducted from options price.

OPTIONS

FS10-150ST3	Extra pillar (150x150x3mm St.)	€ 748	pcs
FS10-150ST5	Extra pillar (150x150x5mm St.)	€ 1.116	pcs
FS11	Deco ceiling cover	€ 46	m^2
FS12	Izo-Pro ceiling cover (up to 800 cm width)	€ 39	m^2
FS15	Side beam pillar (50x100mm - Al)	€ 174	pcs
FS15-B	Side beam pillar (100x100mm - Al)	€ 335	pcs
FS16	Wood effect (*Price difference for standart patterns (up to 700cm projection) (*Can not be applied to steel construction or freestanding products with base plate.)	10% of product price	
FS19	Fix louver	€ 46	lm
FS24	W96 Ceiling Cover	€ 53	m^2
FS25	Fabric support profile special color	€ 11	m^2
FS26	Exclusive fabric difference	€ 31	m^2
FS27	3 Axis lighting fabric support profile difference	€ 9	m^2
FS28-1	Stainless steel chain - 100 cm	€ 46	1m
FS28-2	Stainless steel chain - 200 cm	€ 89	2m
FS28-3	Stainless steel chain - 300 cm	€ 134	3m
FS28-4	Stainless steel chain - 400 cm	€ 179	4m
FS29-1	Sun Sensor (SUNIS) (with Universal Receiver, it's included in the price)	€ 596	pcs
FS29-2	Wind Sensor (EOLIS RTS) (with Universal Receiver, it's included in the price)	€ 367	pcs
FS29-3	Sun and Wind Sensor (SOLIRIS) (with Universal Receiver, it's included in the price)	€ 459	pcs
FS30	CONNEXOON	€246	pcs
FS31-1	Remote Control - PURE - Telis 1	€55	pcs
FS31-4	Remote Control - PURE - Telis 4	€93	pcs
FS31-16	Remote Control - PURE - Telis 16	€264	pcs
FS32-1	Remote Control - PATIO - Telis 1	€76	pcs
FS32-4	Remote Control - PATIO - Telis 4	€123	pcs
FS33-1	Remote Control - LOUNGE - Telis 1	€93	pcs
FS33-4	Remote Control - LOUNGE - Telis 4	€133	pcs
FS34-1	Remote Control - MODULIS PURE - Telis 1	€125	pcs
FS34-4	Remote Control - MODULIS PURE - Telis 4	€192	pcs
FS35-1	Remote Control - MODULIS LOUNGE - Telis 1	€144	pcs
FS35-4	Remote Control - MODULIS LOUNGE - Telis 4	€220	pcs

*** Can't apply a sensor to the single motor product. For further information please contact with PALMIYE**

EXTENSIONS

Rail	PLUS - 120x150mm	€ 209	lm
Beam	Al. 42x150mm	€ 65	lm
Beam	Al. 50x150mm	€ 115	lm
Beam	Al. 100x150mm	€ 96	lm
Beam	St. 100x150x3mm	€ 190	lm
Beam	St. 100x150x5mm	€ 246	lm
Beam	St. 100x200x3mm	€ 193	lm
Beam	St. 100x200x5mm	€ 293	lm
Fabric protection cover	Al. - 63x___cm	€ 37	m^2
Gutter	Special Profile	€ 28	lm
Pillar	St. 150x150x3mm	€ 261	lm
Pillar	St. 150x150x5mm	€ 390	lm

* Max. St 5mm front pillar height is 480cm

PRICE DIFFERENCE

	BEAM GROUP			
Back Beam	**Standard**	St. 150x150x3mm		
	to	St. 150x150x5mm	€ 95	lm
Front Beam	**Standard**	**Al. 100x150mm**		
	to	St. 100x150x3mm	€ 95	lm
		St. 100x150x5mm	€ 151	lm
		St. 100x200x3mm	€ 98	lm
		St. 100x200x5mm	€ 197	lm
Front Pillar	**PILLAR GROUP**			
	Standart:	**St. 150x150x3mm**		
	to	St.150x150x5mm	367€	lm

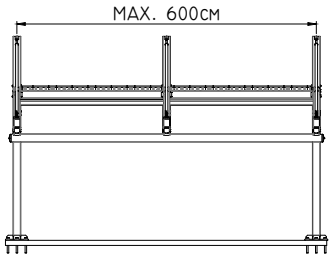

- The product produces as 3 mm steel beam and pillar.
- The front beam can't produces as a steel.
- With pillar reduction applications, Back Half Pillar must be installed at the back of each rail shaft.
- In standard applications 1 back pillar St. 150x150x3mm should be added to each rail shaft.
- When pillar reduction is applied, steel pillars should be 150x150x5 mm.
- Ground flanges are 380x380x15 mm

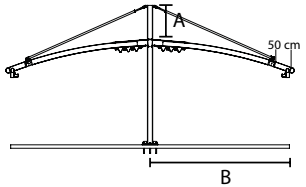

- Max. pillar length: 480 cm

STANDARD "A" VALUES

B (cm)	350	400	450	500	550	600
A (cm)	50	60	70	80	90	100

BRIDGE
COMPACT
Twin

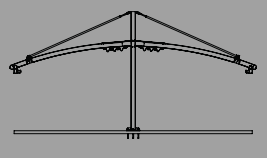

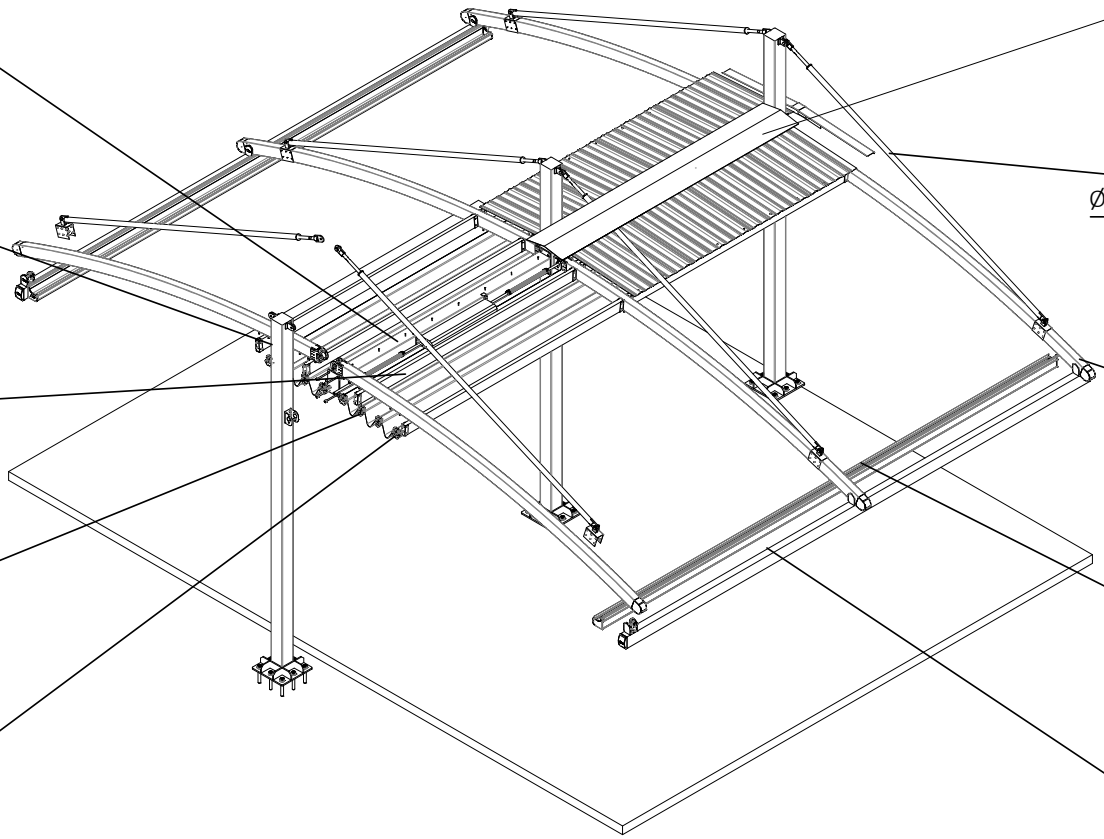

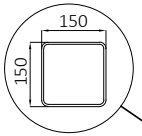

DMR.PRF.G1021
Back Beam

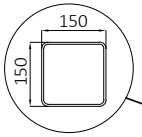

DMR.PRF.G1021
Back Pillar

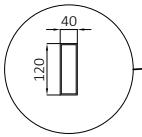

ALM.PRF.G1019
Cross Beam

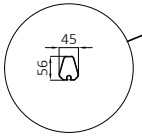

ALM.PRF.P1026
Fabric Support Profile
(Single)

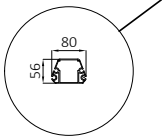

ALM.PRF.P1030
Fabric Support Profile
(Double)

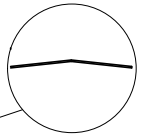

ALM.LVH.G6006
Top Cover

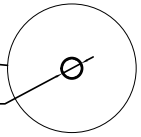

DMR.PRF.G2002
Hanging Pipe

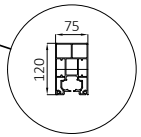

ALM.PRF.P1021
Rail Profile

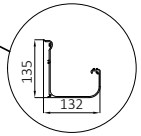

ALM.PRF.P1007
Gutter

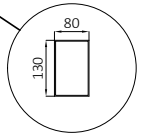

ALM.PRF.P1017
Front Beam

MAXIMUM DIMENSIONS

	WIDTH	PROJECTION
2 RAILS	400 cm	1200 cm
3 RAILS	800 cm	1200 cm
4 RAILS	1200 cm	1200 cm
5 RAILS	1300 cm	1200 cm

TECHNICAL FEATURES

COLLECTED FABRIC DIMENSIONS

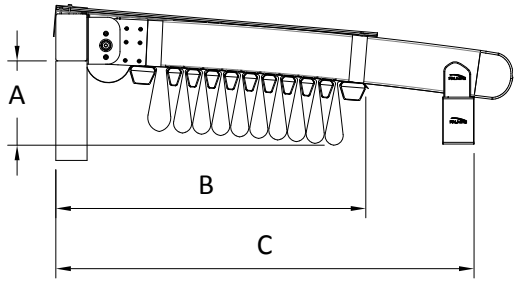

Projection cm

No of Fabric Support Profiles	200	250	300	350	400	450	500	550	600	C
5	30									68
6		31								74
8			33							87
9				34						94
10					35					100
11						36				107
13							38			120
14								39		126
15									40	133
				A						B

*Calculated according to a slope of 15%

DRAINAGE CALCULATION

Type	Max. m²
COMPACT	30 m²/pc

* per drainage

There should be at least one drainage, each 8 m length gutter.

RADIUS CHART

RADIUS	650	850	1500

Projection	A			B
300	41			
400	58			
500	81	65		
600		85		
700		109		
800		137	83	
900			100	
1000			118	
1100			139	
1200			161	

*The values are approx. ± 5 cm

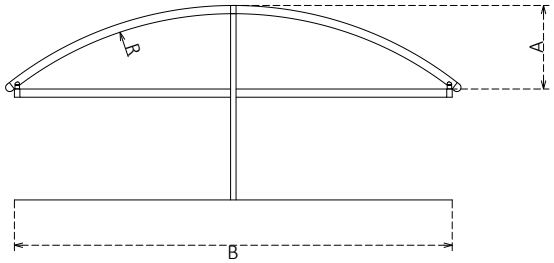

WIND RESISTANCE

WIDTH (cm)

PROJECTION (cm)	450	500	550	600	650	700	750	800	850	900	950	1000	1050	1100	1150	1200	1250	1300
400	11	11	11	11	11	11	11	10	10	10	11	11	11	11	10	10	10	10
500	11	11	10	10	10	10	9	9	9	9	10	10	10	9	9	9	9	9
600	10	10	10	9	9	9	8	8	8	8	9	9	9	8	8	8	8	8
700	9	9	9	8	8	8	7	7	7	7	8	8	8	7	7	7	7	7
800	9	9	8	7	7	7	7	7	7	6	7	7	7	7	7	7	7	6
900	7	7	7	6	6	6	6	6	6	5	6	6	6	6	6	6	6	5
1000	6	6	6	6	6	6	6	5	5	5	6	6	6	6	5	5	5	5
1100	5	5	5	5	5	5	5	5	5	5	5	5	5	5	5	5	5	5
1200	5	5	5	5	5	5	5	4	4	4	5	5	5	5	4	4	4	4

All sides open

*The values are given according to the Beaufort scale.

**Calculated for Products with a front height of 250 cm according to Eurocode EN 1991-1-4 Terrain Category 4.

*** You can ask for new calculations for special designs.

BRIDGE COMPACT Twin

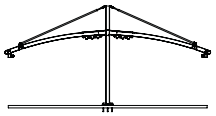

Width

Projection

	2 RAILS				3 RAILS								4 RAILS								5 RAILS		FS4 FS10-C	FS9-C
	250 cm	300 cm	350 cm	400 cm	450 cm	500 cm	550 cm	600 cm	650 cm	700 cm	750 cm	800 cm	850 cm	900 cm	950 cm	1000 cm	1050 cm	1100 cm	1150 cm	1200 cm	1250 cm	1300 cm		
400 cm	€ 8.256	€ 8.625	€ 9.428	€ 9.804	€ 10.172	€ 11.743	€ 12.161	€ 12.534	€ 13.335	€ 13.703	€ 14.156	€ 14.522	€ 14.895	€ 15.261	€ 17.190	€ 17.555	€ 17.926	€ 18.291	€ 18.662	€ 19.026	€ 19.581	€ 20.186	€ 858	€ 226
450 cm	€ 8.426	€ 8.922	€ 9.614	€ 9.995	€ 10.372	€ 12.034	€ 12.556	€ 12.936	€ 13.624	€ 14.000	€ 14.459	€ 14.952	€ 15.330	€ 15.705	€ 17.583	€ 17.957	€ 18.453	€ 18.827	€ 19.204	€ 19.577	€ 20.137	€ 20.750	€ 921	€ 252
500 cm	€ 8.596	€ 9.218	€ 9.797	€ 10.184	€ 10.570	€ 12.324	€ 12.950	€ 13.335	€ 13.911	€ 14.297	€ 14.761	€ 15.379	€ 15.763	€ 16.147	€ 17.973	€ 18.356	€ 18.979	€ 19.361	€ 19.743	€ 20.125	€ 20.690	€ 21.311	€ 984	€ 277
550 cm	€ 8.906	€ 9.565	€ 10.180	€ 10.603	€ 11.027	€ 12.876	€ 13.539	€ 13.961	€ 14.573	€ 14.991	€ 15.495	€ 16.151	€ 16.571	€ 16.991	€ 18.913	€ 19.332	€ 19.991	€ 20.407	€ 20.827	€ 21.246	€ 21.847	€ 22.504	€ 1.047	€ 303
600 cm	€ 9.216	€ 9.911	€ 10.562	€ 11.022	€ 11.482	€ 13.428	€ 14.127	€ 14.585	€ 15.234	€ 15.685	€ 16.229	€ 16.920	€ 17.376	€ 17.833	€ 19.851	€ 20.307	€ 21.001	€ 21.450	€ 21.910	€ 22.364	€ 23.003	€ 23.695	€ 1.110	€ 329
650 cm	€ 9.505	€ 10.092	€ 10.749	€ 11.334	€ 11.803	€ 13.821	€ 14.405	€ 14.989	€ 15.646	€ 16.106	€ 16.655	€ 17.355	€ 17.817	€ 18.278	€ 20.488	€ 20.950	€ 21.532	€ 21.989	€ 22.572	€ 23.035	€ 23.681	€ 24.259	€ 1.172	€ 354
700 cm	€ 9.795	€ 10.273	€ 10.936	€ 11.647	€ 12.124	€ 14.213	€ 14.683	€ 15.393	€ 16.059	€ 16.528	€ 17.082	€ 17.789	€ 18.257	€ 18.724	€ 21.126	€ 21.591	€ 22.063	€ 22.529	€ 23.234	€ 23.705	€ 24.360	€ 24.823	€ 1.235	€ 380
750 cm	€ 9.971	€ 10.454	€ 11.124	€ 11.845	€ 12.324	€ 14.486	€ 14.964	€ 15.679	€ 16.353	€ 16.827	€ 17.391	€ 18.103	€ 18.579	€ 19.055	€ 21.525	€ 21.999	€ 22.477	€ 22.951	€ 23.661	€ 24.141	€ 24.800	€ 25.273	€ 1.298	€ 405
800 cm	€ 10.145	€ 10.633	€ 11.313	€ 12.042	€ 12.523	€ 14.756	€ 15.244	€ 15.964	€ 16.646	€ 17.125	€ 17.697	€ 18.416	€ 18.901	€ 19.385	€ 21.922	€ 22.406	€ 22.889	€ 23.372	€ 24.086	€ 24.575	€ 25.240	€ 25.721	€ 1.361	€ 431
850 cm	€ 10.325	€ 10.822	€ 11.508	€ 12.241	€ 12.735	€ 15.036	€ 15.529	€ 16.257	€ 16.946	€ 17.434	€ 18.011	€ 18.738	€ 19.231	€ 19.721	€ 22.327	€ 22.818	€ 23.310	€ 23.798	€ 24.521	€ 25.015	€ 25.688	€ 26.175	€ 1.424	€ 456
900 cm	€ 10.505	€ 11.011	€ 11.702	€ 12.441	€ 12.946	€ 15.316	€ 15.814	€ 16.551	€ 17.244	€ 17.742	€ 18.324	€ 19.058	€ 19.560	€ 20.056	€ 22.729	€ 23.229	€ 23.729	€ 24.223	€ 24.955	€ 25.454	€ 26.136	€ 26.628	€ 1.487	€ 482
950 cm	€ 10.679	€ 11.191	€ 11.890	€ 12.638	€ 13.148	€ 15.589	€ 16.095	€ 16.838	€ 17.536	€ 18.042	€ 18.633	€ 19.373	€ 19.884	€ 20.385	€ 23.128	€ 23.637	€ 24.143	€ 24.645	€ 25.382	€ 25.889	€ 26.577	€ 27.077	€ 1.550	€ 508
1000 cm	€ 10.852	€ 11.369	€ 12.076	€ 12.832	€ 13.348	€ 15.860	€ 16.376	€ 17.123	€ 17.827	€ 18.341	€ 18.941	€ 19.686	€ 20.205	€ 20.712	€ 23.525	€ 24.043	€ 24.554	€ 25.064	€ 25.806	€ 26.322	€ 27.015	€ 27.524	€ 1.613	€ 533
1050 cm	€ 11.024	€ 11.548	€ 12.263	€ 13.026	€ 13.549	€ 16.132	€ 16.656	€ 17.408	€ 18.118	€ 18.640	€ 19.248	€ 20.000	€ 20.527	€ 21.040	€ 23.923	€ 24.448	€ 24.964	€ 25.484	€ 26.231	€ 26.755	€ 27.453	€ 27.971	€ 1.676	€ 559
1100 cm	€ 11.197	€ 11.727	€ 12.450	€ 13.220	€ 13.749	€ 16.403	€ 16.936	€ 17.693	€ 18.409	€ 18.939	€ 19.556	€ 20.313	€ 20.848	€ 21.367	€ 24.321	€ 24.854	€ 25.375	€ 25.904	€ 26.655	€ 27.189	€ 27.891	€ 28.418	€ 1.740	€ 584
1150 cm	€ 11.370	€ 11.906	€ 12.636	€ 13.415	€ 13.950	€ 16.674	€ 17.216	€ 17.978	€ 18.700	€ 19.238	€ 19.864	€ 20.627	€ 21.169	€ 21.695	€ 24.719	€ 25.260	€ 25.786	€ 26.323	€ 27.080	€ 27.622	€ 28.329	€ 28.865	€ 1.801	€ 610
1200 cm	€ 11.542	€ 12.084	€ 12.823	€ 13.609	€ 14.150	€ 16.946	€ 17.497	€ 18.263	€ 18.991	€ 19.537	€ 20.172	€ 20.940	€ 21.491	€ 22.022	€ 25.117	€ 25.665	€ 26.197	€ 26.743	€ 27.504	€ 28.055	€ 28.767	€ 29.312	€ 1.865	€ 635

FS3	€ 298	€ 312	€ 341	€ 374	€ 405	€ 436	€ 467	€ 498	€ 529	€ 560	€ 720	€ 751	€ 782	€ 813	€ 847	€ 878	€ 908	€ 939	€ 970	€ 1.001	€ 1.032	€ 1.063
FS5-A	€ 55	€ 69	€ 81	€ 93	€ 107	€ 119	€ 134	€ 145	€ 160	€ 172	€ 186	€ 198	€ 212	€ 224	€ 238	€ 250	€ 265	€ 277	€ 291	€ 303	€ 317	€ 329
FS5-E	€ 76	€ 95	€ 112	€ 128	€ 148	€ 164	€ 184	€ 200	€ 220	€ 236	€ 256	€ 273	€ 292	€ 309	€ 328	€ 345	€ 364	€ 381	€ 401	€ 417	€ 437	€ 453

FS3	Gutter System (for both direction)
FS5-A	Additional Fabric Support Profile (Standard) (for both direction)
FS5-E	Additional Fabric Support Profile (3 Axis) (for both direction)
FS4	Additional Rail for COMPACT Series - Al. - 75x120mm (for both direction)
FS8	Lighting System

FS8		LED TYPE & MODULE		
		2 LED	3 LED	4 LED
FS8-S	SPOT	€ 125	€ 152	€ 179
FS8-L	LINEAR	€ 179	€ 233	-
FS8-E	3 AXIS	€ 206	€ 268	-

* FS9 Side Beam is not included in the price
* FS Flexy Plain/3D or Stam 6002 is included in the price
* Motor and Remote control is included in the price
* RAL Colours specified in Aluminium coating catalogue are included in price. Any other RAL colours which are existing in our Supplier's stock can be applied without extra cost.
* Standard colours are RAL9010, RAL7040, RAL1013, RAL7046, RAL9004, RAL3022, RAL120-2, RAL7036, RAL8019, RAL120-5, RAL8025, RAL4001, RAL620-3, RAL5008
* Painting cost has to be min. 125€
* Plastic parts coloured only specified colours

DEDUCTIONS

Price deduction can apply only front pillars, back pillars and side beam. The price of the front pillar, back pillar and side beam can be deducted from options price.

OPTIONS

FS10-150ST3	Extra pillar (150x150x3mm St.)	€ 748	pcs
FS10-150ST5	Extra pillar (150x150x5mm St.)	€ 1.116	pcs
FS11	Deco ceiling cover	€ 46	m^2
FS12	Izo-Pro ceiling cover (up to 800 cm width)	€ 39	m^2
FS15-C	Side beam pillar (80x80mm - Al)	€ 246	pcs
FS16	Wood effect (*Price difference for standart patterns (up to 700cm projection) (*Can not be applied to steel construction or freestanding prod-ucts with base plate.)	10% of product price	
FS19	Fix louver	€ 46	lm
FS24	W96 Ceiling Cover	€ 53	m^2
FS25	Fabric support profile special color	€ 11	m^2
FS26	Exclusive fabric difference	€ 31	m^2
FS27	3 Axis lighting fabric support profile difference	€ 9	m^2
FS28-1	Stainless steel chain - 100 cm	€ 46	1m
FS28-2	Stainless steel chain - 200 cm	€ 89	2m
FS28-3	Stainless steel chain - 300 cm	€ 134	3m
FS28-4	Stainless steel chain - 400 cm	€ 179	4m
FS29-1	Sun Sensor (SUNIS) (with Universal Receiver, it's included in the price)	€ 596	pcs
FS29-2	Wind Sensor (EOLIS RTS) (with Universal Receiver, it's included in the price)	€ 367	pcs
FS29-3	Sun and Wind Sensor (SOLIRIS) (with Universal Receiver, it's included in the price)	€ 459	pcs
FS30	CONNEXOON	€246	pcs
FS31-1	Remote Control - PURE - Telis 1	€55	pcs
FS31-4	Remote Control - PURE - Telis 4	€93	pcs
FS31-16	Remote Control - PURE - Telis 16	€264	pcs
FS32-1	Remote Control - PATIO - Telis 1	€76	pcs
FS32-4	Remote Control - PATIO - Telis 4	€123	pcs
FS33-1	Remote Control - LOUNGE - Telis 1	€93	pcs
FS33-4	Remote Control - LOUNGE - Telis 4	€133	pcs
FS34-1	Remote Control - MODULIS PURE - Telis 1	€125	pcs
FS34-4	Remote Control - MODULIS PURE - Telis 4	€192	pcs
FS35-1	Remote Control - MODULIS LOUNGE - Telis 1	€144	pcs
FS35-4	Remote Control - MODULIS LOUNGE - Telis 4	€220	pcs

*** Can't apply a sensor to the single motor product. For further information please contact with PALMIYE**

EXTENSIONS

Rail	COMPACT - 75x120mm	€ 128	lm
Beam	Al. 80x130mm	€ 61	lm
Beam	Al. 100x150mm	€ 96	lm
Beam	St. 100x150x3mm	€ 190	lm
Beam	St. 100x150x5mm	€ 246	lm
Beam	St. 100x200x3mm	€ 193	lm
Beam	St. 100x200x5mm	€ 293	lm
Fabric protection cover	Al. - 63x___cm	€ 37	m^2
Gutter	Special Profile	€ 28	lm
Pillar	St. 150x150x3mm	€ 261	lm
Pillar	St. 150x150x5mm	€ 390	lm

* Max. St 5mm front pillar height is 480cm

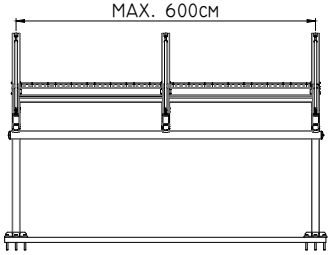

PRICE DIFFERENCE

BEAM GROUP

Back Beam	**Standard**	St. 150x150x3mm		
	to	St. 150x150x5mm	€ 95	lm
Front Beam	**Standard**	**Al. 80x130mm**		
	to	Al. 100x150mm	€ 35	lm
		St. 100x150x3mm	€ 130	lm
		St. 100x150x5mm	€ 186	lm
		St. 100x200x3mm	€ 133	lm
		St. 100x200x5mm	€ 233	lm

PILLAR GROUP

Front Pillar	**Standart:**	**St. 150x150x3mm**		
	to	St.150x150x5mm	367€	lm

- The product produces as 3 mm steel beam and pillar.
- The front beam can't produces as a steel.
- With pillar reduction applications, Back Half Pillar must be installed at the back of each rail shaft.
- In standard applications 1 back pillar St. 150x150x3mm should be added to each rail shaft.
- When pillar reduction is applied, steel pillars should be 150x150x5 mm.
- Ground flanges are 380x380x15 mm

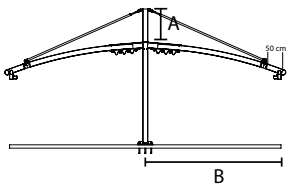

- Max. pillar length: 480 cm

STANDARD "A" VALUES

B (cm)	350	400	450	500	550	600
A (cm)	50	60	70	80	90	100

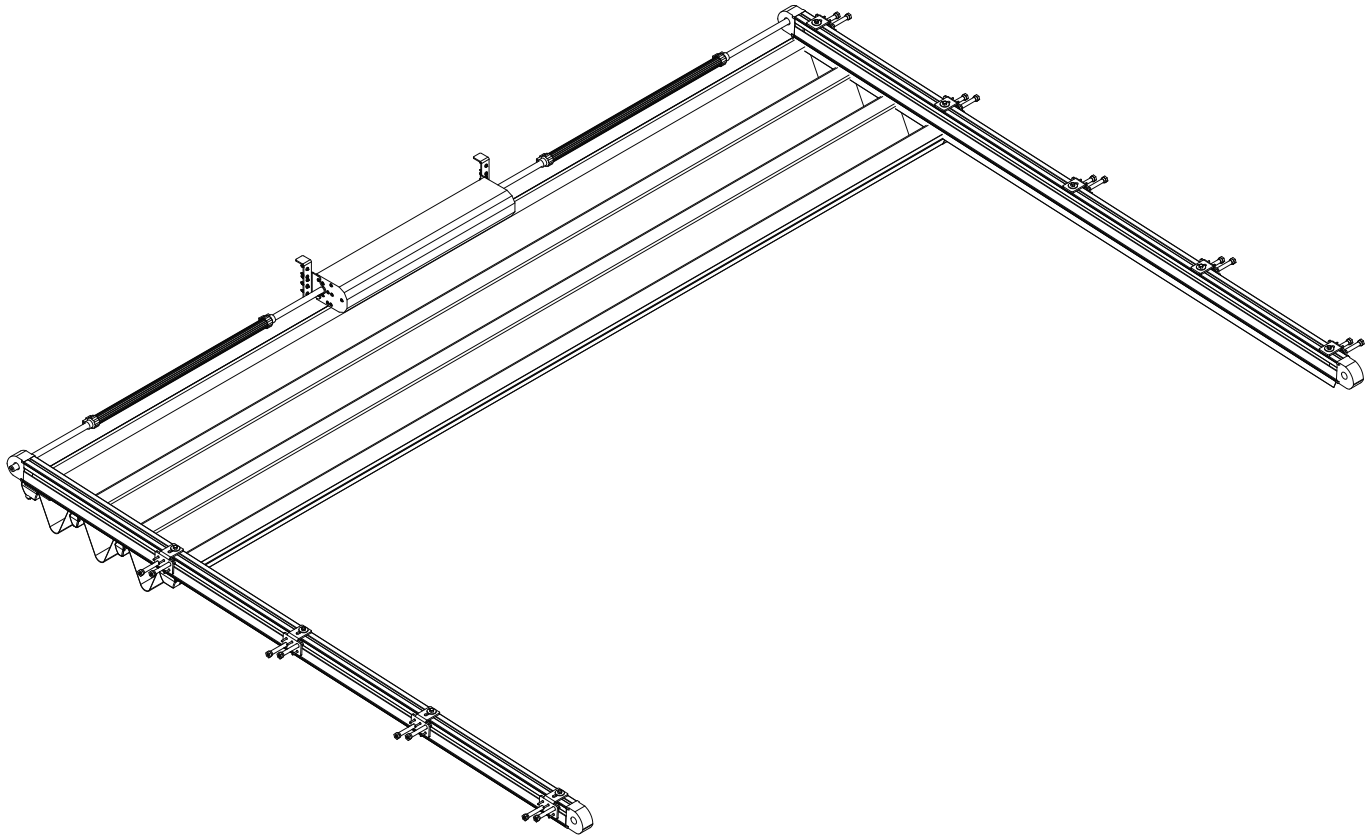

LEGEND

I N D E X

PRODUCT FORMS

- **LEGEND**

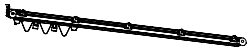

LEGEND

MAXIMUM DIMENSIONS

	WIDTH	PROJECTION
2 RAILS	450 cm	1000 cm
3 RAILS	900 cm	1000 cm
4 RAILS	1300 cm	700 cm

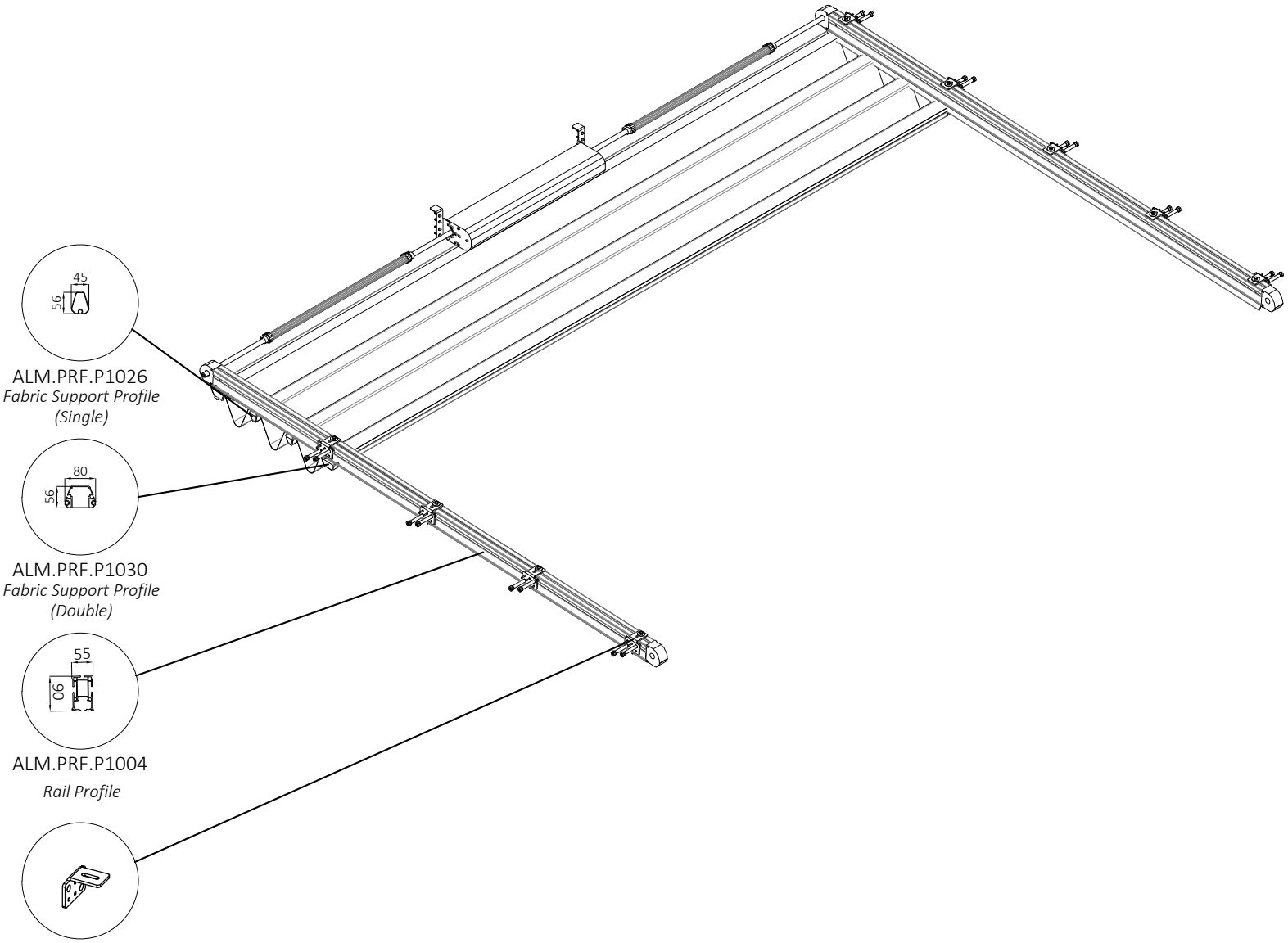

TECHNICAL FEATURES

COLLECTED FABRIC DIMENSIONS

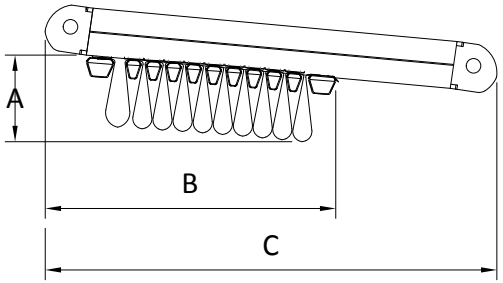

Projection cm

No of Fabric Support Profiles	185	235	284	334	383	433	482	532	581	631	680	729	779	828	878	927	977	C
4	34																	61
5		35																68
6			36															74
7				37														81
8					38													87
9						39												94
10							40											100
11								41										107
12									42									113
14										44								126
15											45							133
16												46						139
17													47					146
18														48				152
19															49			159
20																50		165
21																	51	172
								A										B

*Calculated according to a slope of 15%

MINIMUM SLOPE CHART

Slope	6,4-7,9%	7,4-8,8%	8,4-9,7%	9,4-10,8%	10,4-12%	11,2-12,7%	12-13,4%	13-14,5%	14-15,7%	15-16,6%	16-17,6%
	Rail Center										
	200	**225**	**250**	**275**	**300**	**325**	**350**	**375**	**400**	**425**	**450**
250	16	19	21	24	26	28	30	33	35	38	40
300	20	23	26	29	31	34	37	40	42	45	48
350	23	27	30	34	37	40	43	46	49	53	56
400	27	31	35	39	42	46	49	53	57	61	64
450	32	36	40	44	48	52	56	60	64	69	73
500	36	41	45	50	54	59	63	68	72	77	81
550	40	45	50	55	60	65	70	75	80	85	90
600	44	50	55	61	66	72	77	83	88	94	99
650	49	55	61	67	72	78	84	90	96	102	108
700	54	60	66	73	79	85	91	98	104	111	117
750	59	66	72	79	85	92	99	106	112	119	126
800	63	70	77	85	92	99	106	114	121	129	136
850	67	75	82	91	99	106	113	122	130	138	146
900	71	79	87	97	106	113	120	130	139	148	156
950	75	84	92	103	113	120	127	138	148	157	166
1000	79	88	97	109	120	127	134	146	157	167	176

Projection

For back height of system 30 cm should be added to slope value.

*Note: Max. slope can be up to 25%

LEGEND

Width

Projection

	2 RAILS					3 RAILS									4 RAILS								FS4	FS21
	250 cm	300 cm	350 cm	400 cm	450 cm	500 cm	550 cm	600 cm	650 cm	700 cm	750 cm	800 cm	850 cm	900 cm	950 cm	1000 cm	1050 cm	1100 cm	1150 cm	1200 cm	1250 cm	1300 cm		
200 cm	€ 2.777	€ 2.914	€ 3.107	€ 3.304	€ 3.441	€ 4.050	€ 4.184	€ 4.318	€ 4.572	€ 4.685	€ 4.779	€ 4.911	€ 5.044	€ 5.178	€ 5.849	€ 5.980	€ 6.113	€ 6.246	€ 6.379	€ 6.482	€ 6.659	€ 6.865	€ 1.040	€ 246
250 cm	€ 2.892	€ 3.103	€ 3.291	€ 3.433	€ 3.574	€ 4.241	€ 4.453	€ 4.590	€ 4.778	€ 4.895	€ 4.994	€ 5.204	€ 5.416	€ 5.479	€ 6.128	€ 6.264	€ 6.475	€ 6.611	€ 6.749	€ 6.856	€ 7.039	€ 7.248	€ 1.115	€ 306
300 cm	€ 3.100	€ 3.336	€ 3.549	€ 3.715	€ 3.881	€ 4.633	€ 4.870	€ 5.035	€ 5.247	€ 5.387	€ 5.511	€ 5.746	€ 5.983	€ 6.073	€ 6.790	€ 6.953	€ 7.189	€ 7.350	€ 7.514	€ 7.641	€ 7.849	€ 8.083	€ 1.192	€ 368
350 cm	€ 3.289	€ 3.459	€ 3.676	€ 3.917	€ 4.087	€ 4.903	€ 5.073	€ 5.314	€ 5.533	€ 5.674	€ 5.804	€ 6.044	€ 6.289	€ 6.381	€ 7.223	€ 7.390	€ 7.558	€ 7.725	€ 7.964	€ 8.096	€ 8.310	€ 8.476	€ 1.268	€ 429
400 cm	€ 3.408	€ 3.584	€ 3.805	€ 4.050	€ 4.226	€ 5.100	€ 5.275	€ 5.521	€ 5.743	€ 5.890	€ 6.025	€ 6.270	€ 6.517	€ 6.616	€ 7.510	€ 7.682	€ 7.856	€ 8.026	€ 8.271	€ 8.407	€ 8.625	€ 8.796	€ 1.344	€ 491
450 cm	€ 3.531	€ 3.712	€ 3.938	€ 4.187	€ 4.367	€ 5.303	€ 5.483	€ 5.734	€ 5.961	€ 6.113	€ 6.253	€ 6.501	€ 6.754	€ 6.858	€ 7.805	€ 7.982	€ 8.159	€ 8.336	€ 8.586	€ 8.724	€ 8.947	€ 9.123	€ 1.421	€ 552
500 cm	€ 3.653	€ 3.837	€ 4.068	€ 4.322	€ 4.507	€ 5.503	€ 5.687	€ 5.942	€ 6.175	€ 6.330	€ 6.475	€ 6.729	€ 6.987	€ 7.095	€ 8.095	€ 8.277	€ 8.460	€ 8.640	€ 8.894	€ 9.037	€ 9.265	€ 9.446	€ 1.497	€ 614
550 cm	€ 3.865	€ 4.144	€ 4.398	€ 4.677	€ 4.887	€ 5.976	€ 6.257	€ 6.466	€ 6.798	€ 6.975	€ 7.144	€ 7.424	€ 7.708	€ 7.914	€ 8.901	€ 9.119	€ 9.400	€ 9.606	€ 9.885	€ 10.048	€ 10.300	€ 10.579	€ 1.574	€ 675
600 cm	€ 3.990	€ 4.273	€ 4.534	€ 4.817	€ 5.029	€ 6.179	€ 6.467	€ 6.681	€ 7.015	€ 7.197	€ 7.371	€ 7.656	€ 7.945	€ 8.155	€ 9.207	€ 9.419	€ 9.704	€ 9.916	€ 10.200	€ 10.365	€ 10.623	€ 10.907	€ 1.650	€ 737
650 cm	€ 4.111	€ 4.399	€ 4.663	€ 4.951	€ 5.171	€ 6.380	€ 6.673	€ 6.891	€ 7.231	€ 7.386	€ 7.562	€ 7.851	€ 8.140	€ 8.358	€ 9.500	€ 9.717	€ 9.970	€ 10.223	€ 10.512	€ 10.682	€ 10.944	€ 11.232	€ 1.726	€ 798
700 cm	€ 4.232	€ 4.525	€ 4.794	€ 5.087	€ 5.310	€ 6.581	€ 6.877	€ 7.102	€ 7.447	€ 7.602	€ 7.786	€ 8.080	€ 8.376	€ 8.595	€ 9.792	€ 10.014	€ 10.308	€ 10.530	€ 10.825	€ 10.996	€ 11.265	€ 11.558	€ 1.803	€ 858
750 cm	€ 4.354	€ 4.652	€ 4.925	€ 5.222	€ 5.450	€ 6.782	€ 7.083	€ 7.312	€ 7.663	€ 7.821	€ 8.008	€ 8.306	€ 8.607	€ 8.832	€ 10.084	€ 10.311	€ 10.610	€ 10.837	€ 11.135	€ 11.312	€ 11.584		€ 1.879	€ 920
800 cm	€ 4.568	€ 4.890	€ 5.187	€ 5.509	€ 5.761	€ 7.182	€ 7.509	€ 7.762	€ 8.138	€ 8.319	€ 8.532	€ 8.855	€ 9.180	€ 9.432	€ 10.758	€ 11.009	€ 11.333	€ 11.584	€ 11.910	€ 12.108			€ 1.955	€ 981
850 cm	€ 4.780	€ 5.128	€ 5.449	€ 5.795	€ 6.073	€ 7.581	€ 7.935	€ 8.213	€ 8.614	€ 8.816	€ 9.054	€ 9.403	€ 9.752	€ 10.031	€ 11.432	€ 11.707	€ 12.058	€ 12.333	€ 12.684				€ 2.034	€ 1.042
900 cm	€ 4.994	€ 5.366	€ 5.711	€ 6.082	€ 6.385	€ 7.981	€ 8.361	€ 8.664	€ 9.090	€ 9.314	€ 9.578	€ 9.950	€ 10.325	€ 10.631	€ 12.105	€ 12.405	€ 12.782	€ 13.081					€ 2.114	€ 1.103
950 cm	€ 5.207	€ 5.603	€ 5.972	€ 6.368	€ 6.696	€ 8.381	€ 8.787	€ 9.115	€ 9.565	€ 9.811	€ 10.102	€ 10.499	€ 10.897	€ 11.230	€ 12.779	€ 13.103	€ 13.505						€ 2.192	€ 1.164
1000 cm	€ 5.420	€ 5.842	€ 6.234	€ 6.656	€ 7.007	€ 8.782	€ 9.213	€ 9.566	€ 10.041	€ 10.309	€ 10.624	€ 11.046	€ 11.470	€ 11.830	€ 13.452	€ 13.801							€ 2.272	€ 1.224

*The projection dimension is Rail Profile dimension.

FS3	€ 149	€ 156	€ 170	€ 187	€ 203	€ 218	€ 234	€ 249	€ 265	€ 280	€ 360	€ 376	€ 391	€ 407	€ 423	€ 439	€ 454	€ 470	€ 485	€ 501	€ 516	€ 532
FS5-A	€ 27	€ 35	€ 41	€ 46	€ 54	€ 60	€ 67	€ 73	€ 80	€ 86	€ 93	€ 99	€ 106	€ 112	€ 119	€ 125	€ 132	€ 138	€ 145	€ 151	€ 159	€ 165
FS5-E	€ 38	€ 48	€ 56	€ 64	€ 74	€ 82	€ 92	€ 100	€ 110	€ 118	€ 128	€ 136	€ 146	€ 154	€ 164	€ 172	€ 182	€ 190	€ 200	€ 209	€ 218	€ 227
FS22	€ 114	€ 134	€ 153	€ 170	€ 190	€ 209	€ 228	€ 247	€ 265	€ 284	€ 303	€ 322	€ 341	€ 359	€ 378	€ 397	€ 416	€ 435	€ 453	€ 472	€ 491	€ 510

FS3	Gutter System
FS5-A	Additional Fabric Support Profile (Standard)
FS5-E	Additional Fabric Support Profile (3 Axis)
FS4	Additional Rail Al. - 55x90mm
FS8	Lighting System
FS21	Trapezium Gutter
FS22	Fabric protection cover

FS8		LED TYPE & MODULE		
		2 LED	3 LED	4 LED
FS8-S	SPOT	€ 125	€ 152	€ 179
FS8-L	LINEAR	€ 179	€ 233	-
FS8-E	3 AXIS	€ 206	€ 268	-

* Hanging apparatus is included in the price
* Back beam is not included in the price
* Front beam is not included in the price
* Fabric protection cover is not included in the price
* FS Flexy Plain/3D or Stam 6002 is included in the price
* Motor and Remote control is included in the price
* RAL Colours specified in Aluminium coating catalogue are included in price. Any other RAL colours which are existing in our Supplier's stock can be applied without extra cost.
* Standard colours are RAL9010, RAL7040, RAL1013, RAL7046, RAL9004, RAL3022, RAL120-2, RAL7036, RAL8019, RAL120-5, RAL8025, RAL4001, RAL620-3, RAL5008
* Painting cost has to be min. 125€
* Plastic parts coloured only specified colours

OPTIONS			
FS6	Trapezium ceiling cover (up to 900 cm width)	€ 58	m^2
FS11	Deco ceiling cover	€ 46	m^2
FS12	Izo-Pro ceiling cover (up to 800 cm width)	€ 39	m^2
FS13-A	Wavy ceiling cover (for flexy fabric) (up to 350 cm width)	€ 24	m^2
FS24	W96 Ceiling Cover	€ 53	m^2
FS25	Fabric support profile special color	€ 11	m^2
FS26	Exclusive fabric difference (only tilted products)	€ 31	m^2
FS27	3 Axis lighting fabric support profile difference	€ 9	m^2
FS28-1	Stainless steel chain - 100 cm	€ 46	1m
FS28-2	Stainless steel chain - 200 cm	€ 89	2m
FS28-3	Stainless steel chain - 300 cm	€ 134	3m
FS28-4	Stainless steel chain - 400 cm	€ 179	4m
FS29-1	Sun Sensor (SUNIS) (with Universal Receiver, it's included in the price)	€ 596	pcs
FS29-2	Wind Sensor (EOLIS RTS) (with Universal Receiver, it's included in the price)	€ 367	pcs
FS29-3	Sun and Wind Sensor (SOLIRIS) (with Universal Receiver, it's included in the price)	€ 459	pcs
FS30	CONNEXOON	€246	pcs
FS31-1	Remote Control - PURE - Telis 1	€55	pcs
FS31-4	Remote Control - PURE - Telis 4	€93	pcs
FS31-16	Remote Control - PURE - Telis 16	€264	pcs
FS32-1	Remote Control - PATIO - Telis 1	€76	pcs
FS32-4	Remote Control - PATIO - Telis 4	€123	pcs
FS33-1	Remote Control - LOUNGE - Telis 1	€93	pcs
FS33-4	Remote Control - LOUNGE - Telis 4	€133	pcs
FS34-1	Remote Control - MODULIS PURE - Telis 1	€125	pcs
FS34-4	Remote Control - MODULIS PURE - Telis 4	€192	pcs
FS35-1	Remote Control - MODULIS LOUNGE - Telis 1	€144	pcs
FS35-4	Remote Control - MODULIS LOUNGE - Telis 4	€220	pcs

*** Can't apply a sensor to the single motor product. For further information please contact with PALMIYE**

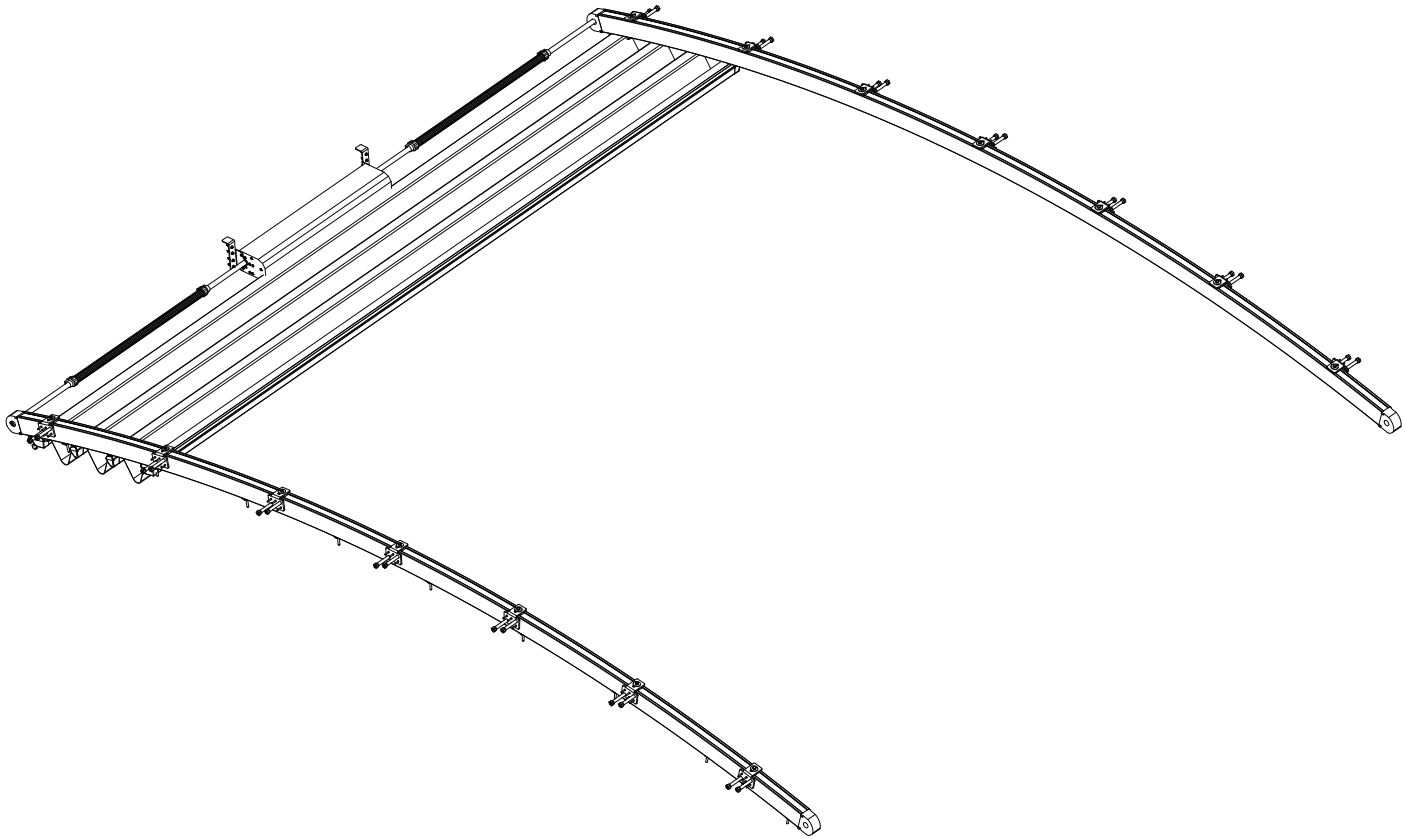

COSMO

I N D E X

PRODUCT FORMS

- **COSMO**

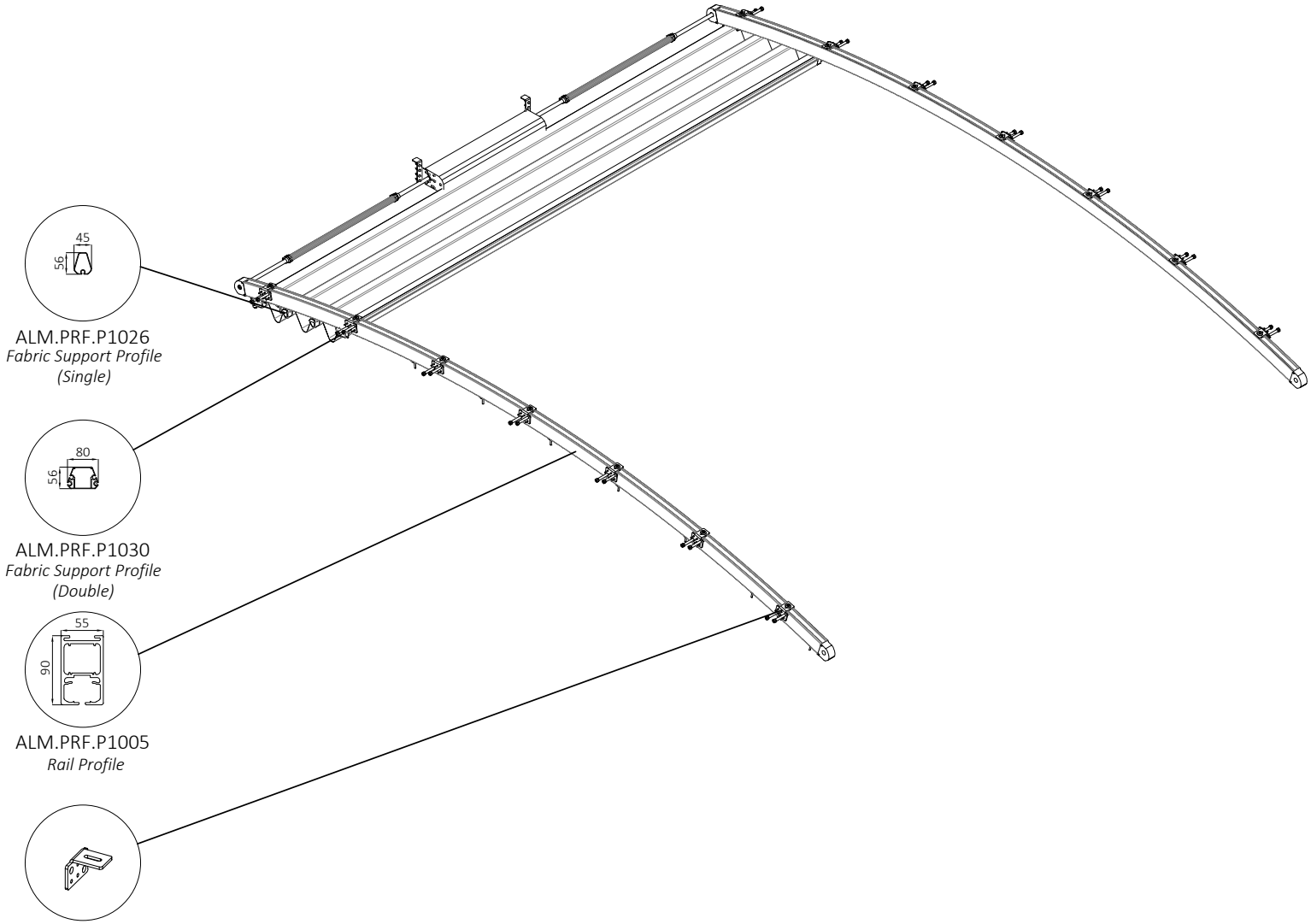

ALM.PRF.P1026
Fabric Support Profile
(Single)

ALM.PRF.P1030
Fabric Support Profile
(Double)

ALM.PRF.P1005
Rail Profile

DMR.APR.P1037
Hanging Apparatus

MAXIMUM DIMENSIONS

	WIDTH	PROJECTION
2 RAILS	400 cm	800 cm
3 RAILS	800 cm	800 cm
4 RAILS	1200 cm	800 cm
5 RAILS	1300 cm	800 cm

TECHNICAL FEATURES

COLLECTED FABRIC DIMENSIONS

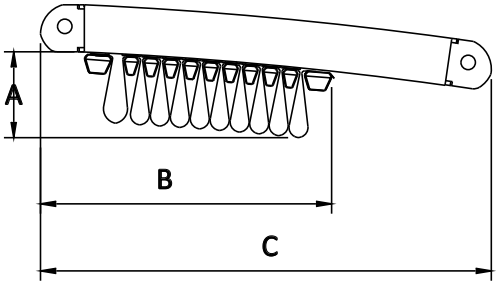

No of Fabric Support Profiles	Projection cm													C
	200	250	300	350	400	450	500	550	600	650	700	750	800	
5	30													68
6		31												74
7			32											81
9				34										94
10					35									100
11						36								107
13							38							120
14								39						127
15									40					133
17										42				146
18											43			152
19												44		159
21													46	172
	←						A						→	B

*Calculated according to a slope of 15%

COSMO

Width

Projection

	2 RAILS				3 RAILS								4 RAILS								5 RAILS		FS4
	250 cm	300 cm	350 cm	400 cm	450 cm	500 cm	550 cm	600 cm	650 cm	700 cm	750 cm	800 cm	850 cm	900 cm	950 cm	1000 cm	1050 cm	1100 cm	1150 cm	1200 cm	1250 cm	1300 cm	
200 cm	€ 3.703	€ 3.886	€ 4.143	€ 4.405	€ 4.588	€ 5.399	€ 5.577	€ 5.756	€ 6.096	€ 6.246	€ 6.371	€ 6.548	€ 6.726	€ 6.903	€ 7.797	€ 7.974	€ 8.150	€ 8.328	€ 8.504	€ 8.643	€ 8.879	€ 9.153	€ 1.040
250 cm	€ 3.856	€ 4.137	€ 4.388	€ 4.577	€ 4.765	€ 5.654	€ 5.937	€ 6.121	€ 6.370	€ 6.526	€ 6.658	€ 6.938	€ 7.220	€ 7.305	€ 8.171	€ 8.352	€ 8.633	€ 8.814	€ 8.998	€ 9.140	€ 9.385	€ 9.664	€ 1.116
300 cm	€ 4.134	€ 4.448	€ 4.731	€ 4.953	€ 5.174	€ 6.178	€ 6.494	€ 6.712	€ 6.995	€ 7.182	€ 7.348	€ 7.661	€ 7.977	€ 8.098	€ 9.054	€ 9.270	€ 9.586	€ 9.800	€ 10.019	€ 10.188	€ 10.466	€ 10.778	€ 1.192
350 cm	€ 4.385	€ 4.612	€ 4.901	€ 5.222	€ 5.449	€ 6.537	€ 6.764	€ 7.084	€ 7.376	€ 7.566	€ 7.738	€ 8.060	€ 8.386	€ 8.508	€ 9.630	€ 9.853	€ 10.077	€ 10.299	€ 10.618	€ 10.795	€ 11.078	€ 11.300	€ 1.269
400 cm	€ 4.544	€ 4.777	€ 5.073	€ 5.400	€ 5.633	€ 6.799	€ 7.033	€ 7.361	€ 7.657	€ 7.853	€ 8.032	€ 8.359	€ 8.688	€ 8.822	€ 10.013	€ 10.243	€ 10.474	€ 10.702	€ 11.028	€ 11.208	€ 11.499	€ 11.728	€ 1.345
450 cm	€ 4.708	€ 4.948	€ 5.250	€ 5.583	€ 5.823	€ 7.071	€ 7.311	€ 7.645	€ 7.948	€ 8.150	€ 8.336	€ 8.669	€ 9.005	€ 9.143	€ 10.406	€ 10.643	€ 10.879	€ 11.115	€ 11.448	€ 11.632	€ 11.929	€ 12.163	€ 1.421
500 cm	€ 4.869	€ 5.116	€ 5.424	€ 5.763	€ 6.009	€ 7.337	€ 7.582	€ 7.923	€ 8.234	€ 8.440	€ 8.632	€ 8.972	€ 9.315	€ 9.459	€ 10.793	€ 11.036	€ 11.279	€ 11.520	€ 11.859	€ 12.049	€ 12.353	€ 12.595	€ 1.497
550 cm	€ 5.154	€ 5.525	€ 5.865	€ 6.237	€ 6.514	€ 7.967	€ 8.343	€ 8.621	€ 9.062	€ 9.300	€ 9.525	€ 9.899	€ 10.276	€ 10.551	€ 11.868	€ 12.157	€ 12.532	€ 12.807	€ 13.179	€ 13.396	€ 13.732	€ 14.106	€ 1.574
600 cm	€ 5.320	€ 5.697	€ 6.045	€ 6.421	€ 6.705	€ 8.238	€ 8.622	€ 8.906	€ 9.353	€ 9.595	€ 9.828	€ 10.208	€ 10.592	€ 10.873	€ 12.275	€ 12.558	€ 12.938	€ 13.220	€ 13.599	€ 13.821	€ 14.164	€ 14.542	€ 1.650
650 cm	€ 5.481	€ 5.866	€ 6.218	€ 6.602	€ 6.894	€ 8.507	€ 8.897	€ 9.188	€ 9.642	€ 9.847	€ 10.082	€ 10.468	€ 10.853	€ 11.143	€ 12.667	€ 12.956	€ 13.292	€ 13.630	€ 14.016	€ 14.242	€ 14.592	€ 14.977	€ 1.726
700 cm	€ 5.643	€ 6.033	€ 6.392	€ 6.783	€ 7.080	€ 8.774	€ 9.170	€ 9.469	€ 9.929	€ 10.137	€ 10.380	€ 10.772	€ 11.168	€ 11.460	€ 13.056	€ 13.351	€ 13.743	€ 14.039	€ 14.432	€ 14.661	€ 15.019	€ 15.409	€ 1.803
750 cm	€ 5.806	€ 6.202	€ 6.567	€ 6.963	€ 7.267	€ 9.041	€ 9.444	€ 9.748	€ 10.216	€ 10.427	€ 10.677	€ 11.075	€ 11.475	€ 11.776	€ 13.446	€ 13.748	€ 14.146	€ 14.448	€ 14.846	€ 15.082	€ 15.444	€ 15.842	€ 1.879
800 cm	€ 6.090	€ 6.519	€ 6.916	€ 7.345	€ 7.682	€ 9.575	€ 10.011	€ 10.349	€ 10.851	€ 11.092	€ 11.374	€ 11.806	€ 12.239	€ 12.575	€ 14.344	€ 14.678	€ 15.112	€ 15.446	€ 15.878	€ 16.143	€ 16.539	€ 16.971	€ 1.955

*The projection dimension is Rail Profile dimension.

FS3	€ 149	€ 156	€ 170	€ 187	€ 203	€ 218	€ 234	€ 249	€ 265	€ 280	€ 360	€ 376	€ 391	€ 407	€ 423	€ 439	€ 454	€ 470	€ 485	€ 501	€ 516	€ 532
FS5-A	€ 27	€ 35	€ 41	€ 46	€ 54	€ 60	€ 67	€ 73	€ 80	€ 86	€ 93	€ 99	€ 106	€ 112	€ 119	€ 125	€ 132	€ 138	€ 145	€ 151	€ 159	€ 165
FS5-E	€ 38	€ 48	€ 56	€ 64	€ 74	€ 82	€ 92	€ 100	€ 110	€ 118	€ 128	€ 136	€ 146	€ 154	€ 164	€ 172	€ 182	€ 190	€ 200	€ 209	€ 218	€ 227
FS22	€ 114	€ 134	€ 153	€ 170	€ 190	€ 209	€ 228	€ 247	€ 265	€ 284	€ 303	€ 322	€ 341	€ 359	€ 378	€ 397	€ 416	€ 435	€ 453	€ 472	€ 491	€ 510

FS3	Gutter System
FS5-A	Additional Fabric Support Profile (Standard)
FS5-E	Additional Fabric Support Profile (3 Axis)
FS4	Additional Rail Al. - 55x90mm
FS8	Lighting System
FS22	Fabric protection cover

FS8		LED TYPE & MODULE		
		2 LED	3 LED	4 LED
FS8-S	SPOT	€ 125	€ 152	€ 179
FS8-L	LINEAR	€ 179	€ 233	-
FS8-E	3 AXIS	€ 206	€ 268	-

* Hanging apparatus is included in the price
* Back beam is not included in the price
* Front beam is not included in the price
* Fabric protection cover is not included in the price
* FS Flexy Plain/3D or Stam 6002 is included in the price
* Motor and Remote control is included in the price
* RAL Colours specified in Aluminium coating catalogue are included in price. Any other RAL colours which are existing in our Supplier's stock can be applied without extra cost.
* Standard colours are RAL9010, RAL7040, RAL1013, RAL7046, RAL9004, RAL3022, RAL120-2, RAL7036, RAL8019, RAL120-5, RAL8025, RAL4001, RAL620-3, RAL5008
* Painting cost has to be min. 125€
* Plastic parts coloured only specified colours

OPTIONS			
FS11	Deco ceiling cover	€ 46	m^2
FS12	Izo-Pro ceiling cover (up to 800 cm width)	€ 39	m^2
FS24	W96 Ceiling Cover	€ 53	m^2
FS25	Fabric support profile special color	€ 11	m^2
FS26	Exclusive fabric difference	€ 31	m^2
FS27	3 Axis lighting fabric support profile difference	€ 9	m^2
FS28-1	Stainless steel chain - 100 cm	€ 46	1m
FS28-2	Stainless steel chain - 200 cm	€ 89	2m
FS28-3	Stainless steel chain - 300 cm	€ 134	3m
FS28-4	Stainless steel chain - 400 cm	€ 179	4m
FS29-1	Sun Sensor (SUNIS) (with Universal Receiver, it's included in the price)	€ 596	pcs
FS29-2	Wind Sensor (EOLIS RTS) (with Universal Receiver, it's included in the price)	€ 367	pcs
FS29-3	Sun and Wind Sensor (SOLIRIS) (with Universal Receiver, it's included in the price)	€ 459	pcs
FS30	CONNEXOON	€246	pcs
FS31-1	Remote Control - PURE - Telis 1	€55	pcs
FS31-4	Remote Control - PURE - Telis 4	€93	pcs
FS31-16	Remote Control - PURE - Telis 16	€264	pcs
FS32-1	Remote Control - PATIO - Telis 1	€76	pcs
FS32-4	Remote Control - PATIO - Telis 4	€123	pcs
FS33-1	Remote Control - LOUNGE - Telis 1	€93	pcs
FS33-4	Remote Control - LOUNGE - Telis 4	€133	pcs
FS34-1	Remote Control - MODULIS PURE - Telis 1	€125	pcs
FS34-4	Remote Control - MODULIS PURE - Telis 4	€192	pcs
FS35-1	Remote Control - MODULIS LOUNGE - Telis 1	€144	pcs
FS35-4	Remote Control - MODULIS LOUNGE - Telis 4	€220	pcs

*** Can't apply a sensor to the single motor product. For further information please contact with PALMIYE**

FABRIC PRICE & INFORMATION

Inclusive Fabric Support Profiles

3D Flexy / Flexy Plain / Stam 6002
Ready Fabric

Width

Projection	250	300	350	400	450	500	550	600	650	700	750	800	850	900	950	1000	1050	1100	1150	1200	1250	1300
200	€ 458	€ 549	€ 641	€ 732	€ 824	€ 904	€ 982	€ 1.071	€ 1.160	€ 1.249	€ 1.321	€ 1.409	€ 1.497	€ 1.585	€ 1.652	€ 1.739	€ 1.825	€ 1.887	€ 1.973	€ 2.058	€ 2.115	€ 2.170
250	€ 572	€ 687	€ 801	€ 916	€ 1.030	€ 1.130	€ 1.227	€ 1.339	€ 1.450	€ 1.562	€ 1.652	€ 1.762	€ 1.872	€ 1.982	€ 2.065	€ 2.173	€ 2.282	€ 2.359	€ 2.466	€ 2.573	€ 2.644	€ 2.712
300	€ 687	€ 824	€ 961	€ 1.099	€ 1.236	€ 1.356	€ 1.472	€ 1.606	€ 1.740	€ 1.874	€ 1.982	€ 2.114	€ 2.246	€ 2.378	€ 2.477	€ 2.608	€ 2.738	€ 2.830	€ 2.959	€ 3.088	€ 3.173	€ 3.255
350	€ 801	€ 961	€ 1.122	€ 1.282	€ 1.442	€ 1.582	€ 1.718	€ 1.874	€ 2.030	€ 2.186	€ 2.312	€ 2.466	€ 2.620	€ 2.775	€ 2.890	€ 3.042	€ 3.195	€ 3.302	€ 3.452	€ 3.602	€ 3.702	€ 3.797
400	€ 916	€ 1.099	€ 1.282	€ 1.465	€ 1.648	€ 1.808	€ 1.963	€ 2.142	€ 2.320	€ 2.499	€ 2.642	€ 2.819	€ 2.995	€ 3.171	€ 3.303	€ 3.477	€ 3.651	€ 3.774	€ 3.945	€ 4.117	€ 4.231	€ 4.340
450	€ 1.030	€ 1.236	€ 1.442	€ 1.648	€ 1.854	€ 2.034	€ 2.209	€ 2.409	€ 2.610	€ 2.811	€ 2.973	€ 3.171	€ 3.369	€ 3.567	€ 3.716	€ 3.912	€ 4.107	€ 4.246	€ 4.439	€ 4.632	€ 4.760	€ 4.882
500	€ 1.144	€ 1.373	€ 1.602	€ 1.831	€ 2.060	€ 2.260	€ 2.454	€ 2.677	€ 2.900	€ 3.123	€ 3.303	€ 3.523	€ 3.744	€ 3.964	€ 4.129	€ 4.346	€ 4.564	€ 4.717	€ 4.932	€ 5.146	€ 5.288	€ 5.425
550	€ 1.259	€ 1.511	€ 1.762	€ 2.014	€ 2.266	€ 2.486	€ 2.699	€ 2.945	€ 3.190	€ 3.436	€ 3.633	€ 3.876	€ 4.118	€ 4.360	€ 4.542	€ 4.781	€ 5.020	€ 5.189	€ 5.425	€ 5.661	€ 5.817	€ 5.967
600	€ 1.373	€ 1.648	€ 1.923	€ 2.197	€ 2.472	€ 2.712	€ 2.945	€ 3.213	€ 3.480	€ 3.748	€ 3.964	€ 4.228	€ 4.492	€ 4.756	€ 4.955	€ 5.216	€ 5.476	€ 5.661	€ 5.918	€ 6.175	€ 6.346	€ 6.510
650	€ 1.488	€ 1.785	€ 2.083	€ 2.380	€ 2.678	€ 2.938	€ 3.190	€ 3.480	€ 3.770	€ 4.060	€ 4.294	€ 4.580	€ 4.867	€ 5.153	€ 5.368	€ 5.650	€ 5.933	€ 6.133	€ 6.411	€ 6.690	€ 6.875	€ 7.052
700	€ 1.602	€ 1.923	€ 2.243	€ 2.563	€ 2.884	€ 3.164	€ 3.436	€ 3.748	€ 4.060	€ 4.373	€ 4.624	€ 4.933	€ 5.241	€ 5.549	€ 5.781	€ 6.085	€ 6.389	€ 6.604	€ 6.905	€ 7.205	€ 7.404	€ 7.595
750	€ 1.717	€ 2.060	€ 2.403	€ 2.747	€ 3.090	€ 3.390	€ 3.681	€ 4.016	€ 4.350	€ 4.685	€ 4.955	€ 5.285	€ 5.615	€ 5.946	€ 6.194	€ 6.519	€ 6.845	€ 7.076	€ 7.398	€ 7.719	€ 7.933	€ 8.137
800	€ 1.831	€ 2.197	€ 2.563	€ 2.930	€ 3.296	€ 3.616	€ 3.927	€ 4.283	€ 4.640	€ 4.997	€ 5.285	€ 5.637	€ 5.990	€ 6.342	€ 6.606	€ 6.954	€ 7.302	€ 7.548	€ 7.891	€ 8.234	€ 8.461	€ 8.680
850	€ 1.945	€ 2.335	€ 2.724	€ 3.113	€ 3.502	€ 3.842	€ 4.172	€ 4.551	€ 4.930	€ 5.310	€ 5.615	€ 5.990	€ 6.364	€ 6.738	€ 7.019	€ 7.389	€ 7.758	€ 8.020	€ 8.384	€ 8.749	€ 8.990	€ 9.222
900	€ 2.060	€ 2.472	€ 2.884	€ 3.296	€ 3.708	€ 4.068	€ 4.417	€ 4.819	€ 5.221	€ 5.622	€ 5.946	€ 6.342	€ 6.738	€ 7.135	€ 7.432	€ 7.823	€ 8.215	€ 8.491	€ 8.877	€ 9.263	€ 9.519	€ 9.765
950	€ 2.174	€ 2.609	€ 3.044	€ 3.479	€ 3.914	€ 4.294	€ 4.663	€ 5.087	€ 5.511	€ 5.934	€ 6.276	€ 6.694	€ 7.113	€ 7.531	€ 7.845	€ 8.258	€ 8.671	€ 8.963	€ 9.370	€ 9.778	€ 10.048	€ 10.307
1000	€ 2.289	€ 2.747	€ 3.204	€ 3.662	€ 4.120	€ 4.520	€ 4.908	€ 5.354	€ 5.801	€ 6.247	€ 6.606	€ 7.047	€ 7.487	€ 7.927	€ 8.258	€ 8.693	€ 9.127	€ 9.435	€ 9.864	€ 10.292	€ 10.577	€ 10.849

Without Fabric Support Profiles

3D Flexy / Flexy Plain / Stam 6002
Ready Fabric

Width

Projection	250	300	350	400	450	500	550	600	650	700	750	800	850	900	950	1000	1050	1100	1150	1200	1250	1300
200	€ 334	€ 401	€ 468	€ 535	€ 601	€ 657	€ 710	€ 774	€ 839	€ 903	€ 951	€ 1.014	€ 1.077	€ 1.141	€ 1.182	€ 1.244	€ 1.307	€ 1.344	€ 1.405	€ 1.466	€ 1.498	€ 1.528
250	€ 418	€ 501	€ 585	€ 668	€ 752	€ 821	€ 887	€ 968	€ 1.048	€ 1.129	€ 1.188	€ 1.267	€ 1.347	€ 1.426	€ 1.478	€ 1.556	€ 1.633	€ 1.679	€ 1.756	€ 1.832	€ 1.873	€ 1.910
300	€ 501	€ 601	€ 702	€ 802	€ 902	€ 985	€ 1.065	€ 1.161	€ 1.258	€ 1.355	€ 1.426	€ 1.521	€ 1.616	€ 1.711	€ 1.773	€ 1.867	€ 1.960	€ 2.015	€ 2.107	€ 2.199	€ 2.247	€ 2.292
350	€ 585	€ 702	€ 818	€ 935	€ 1.052	€ 1.149	€ 1.242	€ 1.355	€ 1.468	€ 1.581	€ 1.663	€ 1.774	€ 1.885	€ 1.996	€ 2.069	€ 2.178	€ 2.287	€ 2.351	€ 2.458	€ 2.565	€ 2.622	€ 2.674
400	€ 668	€ 802	€ 935	€ 1.069	€ 1.203	€ 1.313	€ 1.419	€ 1.548	€ 1.677	€ 1.806	€ 1.901	€ 2.028	€ 2.155	€ 2.281	€ 2.364	€ 2.489	€ 2.613	€ 2.687	€ 2.809	€ 2.931	€ 2.996	€ 3.056
450	€ 752	€ 902	€ 1.052	€ 1.203	€ 1.353	€ 1.477	€ 1.597	€ 1.742	€ 1.887	€ 2.032	€ 2.139	€ 2.281	€ 2.424	€ 2.566	€ 2.660	€ 2.800	€ 2.940	€ 3.023	€ 3.160	€ 3.298	€ 3.371	€ 3.438
500	€ 835	€ 1.002	€ 1.169	€ 1.336	€ 1.503	€ 1.642	€ 1.774	€ 1.936	€ 2.097	€ 2.258	€ 2.376	€ 2.535	€ 2.693	€ 2.852	€ 2.955	€ 3.111	€ 3.267	€ 3.359	€ 3.512	€ 3.664	€ 3.745	€ 3.820
550	€ 919	€ 1.102	€ 1.286	€ 1.470	€ 1.654	€ 1.806	€ 1.952	€ 2.129	€ 2.306	€ 2.484	€ 2.614	€ 2.788	€ 2.962	€ 3.137	€ 3.251	€ 3.422	€ 3.593	€ 3.695	€ 3.863	€ 4.031	€ 4.120	€ 4.202
600	€ 1.002	€ 1.203	€ 1.403	€ 1.604	€ 1.804	€ 1.970	€ 2.129	€ 2.323	€ 2.516	€ 2.710	€ 2.852	€ 3.042	€ 3.232	€ 3.422	€ 3.547	€ 3.733	€ 3.920	€ 4.031	€ 4.214	€ 4.397	€ 4.494	€ 4.584
650	€ 1.086	€ 1.303	€ 1.520	€ 1.737	€ 1.954	€ 2.134	€ 2.306	€ 2.516	€ 2.726	€ 2.936	€ 3.089	€ 3.295	€ 3.501	€ 3.707	€ 3.842	€ 4.044	€ 4.247	€ 4.367	€ 4.565	€ 4.764	€ 4.869	€ 4.966
700	€ 1.169	€ 1.403	€ 1.637	€ 1.871	€ 2.105	€ 2.298	€ 2.484	€ 2.710	€ 2.936	€ 3.161	€ 3.327	€ 3.549	€ 3.770	€ 3.992	€ 4.138	€ 4.355	€ 4.573	€ 4.703	€ 4.916	€ 5.130	€ 5.243	€ 5.348
750	€ 1.253	€ 1.503	€ 1.754	€ 2.004	€ 2.255	€ 2.462	€ 2.661	€ 2.903	€ 3.145	€ 3.387	€ 3.564	€ 3.802	€ 4.040	€ 4.277	€ 4.433	€ 4.667	€ 4.900	€ 5.038	€ 5.267	€ 5.496	€ 5.618	€ 5.730
800	€ 1.336	€ 1.604	€ 1.871	€ 2.138	€ 2.405	€ 2.627	€ 2.839	€ 3.097	€ 3.355	€ 3.613	€ 3.802	€ 4.056	€ 4.309	€ 4.563	€ 4.729	€ 4.978	€ 5.226	€ 5.374	€ 5.619	€ 5.863	€ 5.992	€ 6.113
850	€ 1.420	€ 1.704	€ 1.988	€ 2.272	€ 2.556	€ 2.791	€ 3.016	€ 3.290	€ 3.565	€ 3.839	€ 4.040	€ 4.309	€ 4.578	€ 4.848	€ 5.024	€ 5.289	€ 5.553	€ 5.710	€ 5.970	€ 6.229	€ 6.367	€ 6.495
900	€ 1.503	€ 1.804	€ 2.105	€ 2.405	€ 2.706	€ 2.955	€ 3.194	€ 3.484	€ 3.774	€ 4.065	€ 4.277	€ 4.563	€ 4.848	€ 5.133	€ 5.320	€ 5.600	€ 5.880	€ 6.046	€ 6.321	€ 6.596	€ 6.741	€ 6.877
950	€ 1.587	€ 1.904	€ 2.222	€ 2.539	€ 2.856	€ 3.119	€ 3.371	€ 3.677	€ 3.984	€ 4.290	€ 4.515	€ 4.816	€ 5.117	€ 5.418	€ 5.615	€ 5.911	€ 6.206	€ 6.382	€ 6.672	€ 6.962	€ 7.116	€ 7.259
1000	€ 1.670	€ 2.004	€ 2.339	€ 2.673	€ 3.007	€ 3.283	€ 3.548	€ 3.871	€ 4.194	€ 4.516	€ 4.753	€ 5.070	€ 5.386	€ 5.703	€ 5.911	€ 6.222	€ 6.533	€ 6.718	€ 7.023	€ 7.329	€ 7.490	€ 7.641

Decorative Fabric
(Acrylic fabric only)

Inclusive Fabric Support Profiles

Width

Projection	250	300	350	400	450	500	550	600	650	700	750	800	850	900	950	1000	1050	1100	1150	1200	1250	1300
200	€ 590	€ 708	€ 826	€ 944	€ 1.062	€ 1.169	€ 1.273	€ 1.389	€ 1.504	€ 1.620	€ 1.718	€ 1.833	€ 1.948	€ 2.062	€ 2.155	€ 2.268	€ 2.382	€ 2.470	€ 2.582	€ 2.694	€ 2.777	€ 2.858
250	€ 738	€ 885	€ 1.033	€ 1.180	€ 1.328	€ 1.461	€ 1.591	€ 1.736	€ 1.880	€ 2.025	€ 2.148	€ 2.291	€ 2.434	€ 2.578	€ 2.693	€ 2.835	€ 2.977	€ 3.087	€ 3.227	€ 3.368	€ 3.472	€ 3.573
300	€ 885	€ 1.062	€ 1.239	€ 1.416	€ 1.593	€ 1.753	€ 1.909	€ 2.083	€ 2.257	€ 2.430	€ 2.578	€ 2.750	€ 2.921	€ 3.093	€ 3.232	€ 3.402	€ 3.572	€ 3.704	€ 3.873	€ 4.041	€ 4.166	€ 4.288
350	€ 1.033	€ 1.239	€ 1.446	€ 1.652	€ 1.859	€ 2.045	€ 2.228	€ 2.430	€ 2.633	€ 2.835	€ 3.007	€ 3.208	€ 3.408	€ 3.609	€ 3.771	€ 3.969	€ 4.168	€ 4.322	€ 4.518	€ 4.715	€ 4.860	€ 5.002
400	€ 1.180	€ 1.416	€ 1.652	€ 1.889	€ 2.125	€ 2.338	€ 2.546	€ 2.777	€ 3.009	€ 3.240	€ 3.437	€ 3.666	€ 3.895	€ 4.124	€ 4.310	€ 4.536	€ 4.763	€ 4.939	€ 5.164	€ 5.388	€ 5.555	€ 5.717
450	€ 1.328	€ 1.593	€ 1.859	€ 2.125	€ 2.390	€ 2.630	€ 2.864	€ 3.124	€ 3.385	€ 3.645	€ 3.867	€ 4.124	€ 4.382	€ 4.640	€ 4.848	€ 5.103	€ 5.359	€ 5.556	€ 5.809	€ 6.062	€ 6.249	€ 6.431
500	€ 1.475	€ 1.771	€ 2.066	€ 2.361	€ 2.656	€ 2.922	€ 3.182	€ 3.472	€ 3.761	€ 4.050	€ 4.296	€ 4.583	€ 4.869	€ 5.155	€ 5.387	€ 5.670	€ 5.954	€ 6.174	€ 6.454	€ 6.735	€ 6.943	€ 7.146
550	€ 1.623	€ 1.948	€ 2.272	€ 2.597	€ 2.921	€ 3.214	€ 3.501	€ 3.819	€ 4.137	€ 4.455	€ 4.726	€ 5.041	€ 5.356	€ 5.671	€ 5.926	€ 6.237	€ 6.549	€ 6.791	€ 7.100	€ 7.409	€ 7.638	€ 7.861
600	€ 1.771	€ 2.125	€ 2.479	€ 2.833	€ 3.187	€ 3.506	€ 3.819	€ 4.166	€ 4.513	€ 4.860	€ 5.155	€ 5.499	€ 5.843	€ 6.186	€ 6.464	€ 6.804	€ 7.145	€ 7.409	€ 7.745	€ 8.082	€ 8.332	€ 8.575
650	€ 1.918	€ 2.302	€ 2.685	€ 3.069	€ 3.452	€ 3.799	€ 4.137	€ 4.513	€ 4.889	€ 5.265	€ 5.585	€ 5.957	€ 6.330	€ 6.702	€ 7.003	€ 7.372	€ 7.740	€ 8.026	€ 8.391	€ 8.756	€ 9.026	€ 9.290
700	€ 2.066	€ 2.479	€ 2.892	€ 3.305	€ 3.718	€ 4.091	€ 4.455	€ 4.860	€ 5.265	€ 5.670	€ 6.015	€ 6.416	€ 6.817	€ 7.218	€ 7.542	€ 7.939	€ 8.336	€ 8.643	€ 9.036	€ 9.429	€ 9.721	€ 10.004
750	€ 2.213	€ 2.656	€ 3.098	€ 3.541	€ 3.984	€ 4.383	€ 4.773	€ 5.207	€ 5.641	€ 6.075	€ 6.444	€ 6.874	€ 7.303	€ 7.733	€ 8.080	€ 8.506	€ 8.931	€ 9.261	€ 9.682	€ 10.103	€ 10.415	€ 10.719
800	€ 2.361	€ 2.833	€ 3.305	€ 3.777	€ 4.249	€ 4.675	€ 5.092	€ 5.555	€ 6.017	€ 6.480	€ 6.874	€ 7.332	€ 7.790	€ 8.249	€ 8.619	€ 9.073	€ 9.526	€ 9.878	€ 10.327	€ 10.776	€ 11.110	€ 11.434
850	€ 2.508	€ 3.010	€ 3.512	€ 4.013	€ 4.515	€ 4.967	€ 5.410	€ 5.902	€ 6.394	€ 6.885	€ 7.303	€ 7.790	€ 8.277	€ 8.764	€ 9.158	€ 9.640	€ 10.122	€ 10.496	€ 10.973	€ 11.450	€ 11.804	€ 12.148
900	€ 2.656	€ 3.187	€ 3.718	€ 4.249	€ 4.780	€ 5.259	€ 5.728	€ 6.249	€ 6.770	€ 7.290	€ 7.733	€ 8.249	€ 8.764	€ 9.280	€ 9.696	€ 10.207	€ 10.717	€ 11.113	€ 11.618	€ 12.123	€ 12.498	€ 12.863
950	€ 2.803	€ 3.364	€ 3.925	€ 4.485	€ 5.046	€ 5.552	€ 6.046	€ 6.596	€ 7.146	€ 7.695	€ 8.163	€ 8.707	€ 9.251	€ 9.795	€ 10.235	€ 10.774	€ 11.312	€ 11.730	€ 12.264	€ 12.797	€ 13.193	€ 13.577
1000	€ 2.951	€ 3.541	€ 4.131	€ 4.721	€ 5.312	€ 5.844	€ 6.365	€ 6.943	€ 7.522	€ 8.100	€ 8.592	€ 9.165	€ 9.738	€ 10.311	€ 10.774	€ 11.341	€ 11.908	€ 12.348	€ 12.909	€ 13.470	€ 13.887	€ 14.292

Decorative Fabric
(Acrylic fabric only)

Without Fabric Support Profiles

Width

Projection	250	300	350	400	450	500	550	600	650	700	750	800	850	900	950	1000	1050	1100	1150	1200	1250	1300
200	€ 469	€ 562	€ 656	€ 750	€ 844	€ 926	€ 1.006	€ 1.097	€ 1.189	€ 1.280	€ 1.354	€ 1.444	€ 1.535	€ 1.625	€ 1.693	€ 1.782	€ 1.872	€ 1.935	€ 2.023	€ 2.111	€ 2.170	€ 2.227
250	€ 586	€ 703	€ 820	€ 937	€ 1.055	€ 1.157	€ 1.257	€ 1.372	€ 1.486	€ 1.600	€ 1.693	€ 1.806	€ 1.918	€ 2.031	€ 2.117	€ 2.228	€ 2.339	€ 2.419	€ 2.529	€ 2.639	€ 2.713	€ 2.784
300	€ 703	€ 844	€ 984	€ 1.125	€ 1.266	€ 1.389	€ 1.509	€ 1.646	€ 1.783	€ 1.920	€ 2.031	€ 2.167	€ 2.302	€ 2.438	€ 2.540	€ 2.674	€ 2.807	€ 2.903	€ 3.035	€ 3.167	€ 3.255	€ 3.341
350	€ 820	€ 984	€ 1.148	€ 1.312	€ 1.477	€ 1.620	€ 1.760	€ 1.920	€ 2.080	€ 2.240	€ 2.370	€ 2.528	€ 2.686	€ 2.844	€ 2.963	€ 3.119	€ 3.275	€ 3.387	€ 3.541	€ 3.695	€ 3.798	€ 3.897
400	€ 937	€ 1.125	€ 1.312	€ 1.500	€ 1.687	€ 1.852	€ 2.012	€ 2.194	€ 2.377	€ 2.560	€ 2.708	€ 2.889	€ 3.070	€ 3.250	€ 3.387	€ 3.565	€ 3.743	€ 3.871	€ 4.046	€ 4.222	€ 4.341	€ 4.454
450	€ 1.055	€ 1.266	€ 1.477	€ 1.687	€ 1.898	€ 2.083	€ 2.263	€ 2.469	€ 2.675	€ 2.880	€ 3.047	€ 3.250	€ 3.453	€ 3.656	€ 3.810	€ 4.011	€ 4.211	€ 4.354	€ 4.552	€ 4.750	€ 4.883	€ 5.011
500	€ 1.172	€ 1.406	€ 1.641	€ 1.875	€ 2.109	€ 2.315	€ 2.515	€ 2.743	€ 2.972	€ 3.200	€ 3.386	€ 3.611	€ 3.837	€ 4.063	€ 4.233	€ 4.456	€ 4.679	€ 4.838	€ 5.058	€ 5.278	€ 5.426	€ 5.568
550	€ 1.289	€ 1.547	€ 1.805	€ 2.062	€ 2.320	€ 2.546	€ 2.766	€ 3.017	€ 3.269	€ 3.520	€ 3.724	€ 3.972	€ 4.221	€ 4.469	€ 4.657	€ 4.902	€ 5.147	€ 5.322	€ 5.564	€ 5.806	€ 5.968	€ 6.124
600	€ 1.406	€ 1.687	€ 1.969	€ 2.250	€ 2.531	€ 2.778	€ 3.017	€ 3.292	€ 3.566	€ 3.840	€ 4.063	€ 4.333	€ 4.604	€ 4.875	€ 5.080	€ 5.347	€ 5.615	€ 5.806	€ 6.070	€ 6.334	€ 6.511	€ 6.681
650	€ 1.523	€ 1.828	€ 2.133	€ 2.437	€ 2.742	€ 3.009	€ 3.269	€ 3.566	€ 3.863	€ 4.160	€ 4.401	€ 4.695	€ 4.988	€ 5.281	€ 5.503	€ 5.793	€ 6.083	€ 6.290	€ 6.576	€ 6.861	€ 7.053	€ 7.238
700	€ 1.641	€ 1.969	€ 2.297	€ 2.625	€ 2.953	€ 3.241	€ 3.520	€ 3.840	€ 4.160	€ 4.480	€ 4.740	€ 5.056	€ 5.372	€ 5.688	€ 5.927	€ 6.239	€ 6.551	€ 6.773	€ 7.081	€ 7.389	€ 7.596	€ 7.795
750	€ 1.758	€ 2.109	€ 2.461	€ 2.812	€ 3.164	€ 3.472	€ 3.772	€ 4.115	€ 4.458	€ 4.800	€ 5.078	€ 5.417	€ 5.755	€ 6.094	€ 6.350	€ 6.684	€ 7.018	€ 7.257	€ 7.587	€ 7.917	€ 8.139	€ 8.351
800	€ 1.875	€ 2.250	€ 2.625	€ 3.000	€ 3.375	€ 3.704	€ 4.023	€ 4.389	€ 4.755	€ 5.120	€ 5.417	€ 5.778	€ 6.139	€ 6.500	€ 6.773	€ 7.130	€ 7.486	€ 7.741	€ 8.093	€ 8.445	€ 8.681	€ 8.908
850	€ 1.992	€ 2.391	€ 2.789	€ 3.187	€ 3.586	€ 3.935	€ 4.275	€ 4.663	€ 5.052	€ 5.440	€ 5.755	€ 6.139	€ 6.523	€ 6.906	€ 7.197	€ 7.576	€ 7.954	€ 8.225	€ 8.599	€ 8.973	€ 9.224	€ 9.465
900	€ 2.109	€ 2.531	€ 2.953	€ 3.375	€ 3.797	€ 4.167	€ 4.526	€ 4.938	€ 5.349	€ 5.761	€ 6.094	€ 6.500	€ 6.906	€ 7.313	€ 7.620	€ 8.021	€ 8.422	€ 8.709	€ 9.105	€ 9.500	€ 9.766	€ 10.022
950	€ 2.227	€ 2.672	€ 3.117	€ 3.562	€ 4.008	€ 4.398	€ 4.778	€ 5.212	€ 5.646	€ 6.081	€ 6.432	€ 6.861	€ 7.290	€ 7.719	€ 8.043	€ 8.467	€ 8.890	€ 9.193	€ 9.610	€ 10.028	€ 10.309	€ 10.578
1000	€ 2.344	€ 2.812	€ 3.281	€ 3.750	€ 4.219	€ 4.630	€ 5.029	€ 5.486	€ 5.943	€ 6.401	€ 6.771	€ 7.222	€ 7.674	€ 8.125	€ 8.467	€ 8.912	€ 9.358	€ 9.676	€ 10.116	€ 10.556	€ 10.851	€ 11.135

Izo-Pro Sattler
Ready Fabric

Inclusive Fabric Support Profiles

Width

Projection	250	300	350	400	450	500	550	600	650	700	750	800	850	900	950	1000	1050	1100	1150	1200	1250	1300
200	€ 569	€ 683	€ 797	€ 911	€ 1.025	€ 1.127	€ 1.227	€ 1.338	€ 1.450	€ 1.561	€ 1.656	€ 1.766	€ 1.876	€ 1.987	€ 2.075	€ 2.184	€ 2.294	€ 2.377	€ 2.486	€ 2.594	€ 2.673	€ 2.750
250	€ 712	€ 854	€ 996	€ 1.138	€ 1.281	€ 1.409	€ 1.534	€ 1.673	€ 1.812	€ 1.952	€ 2.070	€ 2.208	€ 2.346	€ 2.484	€ 2.594	€ 2.731	€ 2.867	€ 2.972	€ 3.107	€ 3.242	€ 3.341	€ 3.437
300	€ 854	€ 1.025	€ 1.195	€ 1.366	€ 1.537	€ 1.690	€ 1.840	€ 2.008	€ 2.175	€ 2.342	€ 2.484	€ 2.649	€ 2.815	€ 2.980	€ 3.113	€ 3.277	€ 3.440	€ 3.566	€ 3.728	€ 3.890	€ 4.009	€ 4.124
350	€ 996	€ 1.195	€ 1.395	€ 1.594	€ 1.793	€ 1.972	€ 2.147	€ 2.342	€ 2.537	€ 2.733	€ 2.897	€ 3.091	€ 3.284	€ 3.477	€ 3.632	€ 3.823	€ 4.014	€ 4.161	€ 4.350	€ 4.539	€ 4.677	€ 4.812
400	€ 1.138	€ 1.366	€ 1.594	€ 1.822	€ 2.049	€ 2.254	€ 2.454	€ 2.677	€ 2.900	€ 3.123	€ 3.311	€ 3.532	€ 3.753	€ 3.974	€ 4.150	€ 4.369	€ 4.587	€ 4.755	€ 4.971	€ 5.187	€ 5.345	€ 5.499
450	€ 1.281	€ 1.537	€ 1.793	€ 2.049	€ 2.305	€ 2.536	€ 2.760	€ 3.011	€ 3.262	€ 3.513	€ 3.725	€ 3.974	€ 4.222	€ 4.470	€ 4.669	€ 4.915	€ 5.161	€ 5.349	€ 5.592	€ 5.836	€ 6.014	€ 6.187
500	€ 1.423	€ 1.708	€ 1.992	€ 2.277	€ 2.562	€ 2.817	€ 3.067	€ 3.346	€ 3.625	€ 3.904	€ 4.139	€ 4.415	€ 4.691	€ 4.967	€ 5.188	€ 5.461	€ 5.734	€ 5.944	€ 6.214	€ 6.484	€ 6.682	€ 6.874
550	€ 1.565	€ 1.878	€ 2.192	€ 2.505	€ 2.818	€ 3.099	€ 3.374	€ 3.681	€ 3.987	€ 4.294	€ 4.553	€ 4.857	€ 5.160	€ 5.464	€ 5.707	€ 6.007	€ 6.308	€ 6.538	€ 6.835	€ 7.132	€ 7.350	€ 7.561
600	€ 1.708	€ 2.049	€ 2.391	€ 2.732	€ 3.074	€ 3.381	€ 3.681	€ 4.015	€ 4.350	€ 4.684	€ 4.967	€ 5.298	€ 5.629	€ 5.960	€ 6.226	€ 6.553	€ 6.881	€ 7.132	€ 7.457	€ 7.781	€ 8.018	€ 8.249
650	€ 1.850	€ 2.220	€ 2.590	€ 2.960	€ 3.330	€ 3.662	€ 3.987	€ 4.350	€ 4.712	€ 5.075	€ 5.381	€ 5.740	€ 6.098	€ 6.457	€ 6.744	€ 7.099	€ 7.454	€ 7.727	€ 8.078	€ 8.429	€ 8.686	€ 8.936
700	€ 1.992	€ 2.391	€ 2.789	€ 3.188	€ 3.586	€ 3.944	€ 4.294	€ 4.684	€ 5.075	€ 5.465	€ 5.795	€ 6.181	€ 6.568	€ 6.954	€ 7.263	€ 7.646	€ 8.028	€ 8.321	€ 8.699	€ 9.078	€ 9.355	€ 9.624
750	€ 2.135	€ 2.562	€ 2.988	€ 3.415	€ 3.842	€ 4.226	€ 4.601	€ 5.019	€ 5.437	€ 5.856	€ 6.209	€ 6.623	€ 7.037	€ 7.451	€ 7.782	€ 8.192	€ 8.601	€ 8.915	€ 9.321	€ 9.726	€ 10.023	€ 10.311
800	€ 2.277	€ 2.732	€ 3.188	€ 3.643	€ 4.099	€ 4.508	€ 4.908	€ 5.354	€ 5.800	€ 6.246	€ 6.623	€ 7.064	€ 7.506	€ 7.947	€ 8.301	€ 8.738	€ 9.175	€ 9.510	€ 9.942	€ 10.374	€ 10.691	€ 10.998
850	€ 2.419	€ 2.903	€ 3.387	€ 3.871	€ 4.355	€ 4.789	€ 5.214	€ 5.688	€ 6.162	€ 6.636	€ 7.037	€ 7.506	€ 7.975	€ 8.444	€ 8.820	€ 9.284	€ 9.748	€ 10.104	€ 10.563	€ 11.023	€ 11.359	€ 11.686
900	€ 2.562	€ 3.074	€ 3.586	€ 4.099	€ 4.611	€ 5.071	€ 5.521	€ 6.023	€ 6.525	€ 7.027	€ 7.451	€ 7.947	€ 8.444	€ 8.941	€ 9.338	€ 9.830	€ 10.321	€ 10.698	€ 11.185	€ 11.671	€ 12.027	€ 12.373
950	€ 2.704	€ 3.245	€ 3.785	€ 4.326	€ 4.867	€ 5.353	€ 5.828	€ 6.357	€ 6.887	€ 7.417	€ 7.864	€ 8.389	€ 8.913	€ 9.437	€ 9.857	€ 10.376	€ 10.895	€ 11.293	€ 11.806	€ 12.319	€ 12.695	€ 13.060
1000	€ 2.846	€ 3.415	€ 3.985	€ 4.554	€ 5.123	€ 5.635	€ 6.134	€ 6.692	€ 7.250	€ 7.807	€ 8.278	€ 8.830	€ 9.382	€ 9.934	€ 10.376	€ 10.922	€ 11.468	€ 11.887	€ 12.428	€ 12.968	€ 13.364	€ 13.748

Izo-Pro Sattler
Ready Fabric

Without Fabric Support Profiles

Width

Projection	250	300	350	400	450	500	550	600	650	700	750	800	850	900	950	1000	1050	1100	1150	1200	1250	1300
200	€ 448	€ 537	€ 627	€ 717	€ 806	€ 884	€ 960	€ 1.047	€ 1.134	€ 1.222	€ 1.291	€ 1.378	€ 1.464	€ 1.550	€ 1.614	€ 1.699	€ 1.784	€ 1.843	€ 1.927	€ 2.011	€ 2.066	€ 2.118
250	€ 560	€ 672	€ 784	€ 896	€ 1.008	€ 1.105	€ 1.200	€ 1.309	€ 1.418	€ 1.527	€ 1.614	€ 1.722	€ 1.829	€ 1.937	€ 2.017	€ 2.123	€ 2.230	€ 2.304	€ 2.409	€ 2.513	€ 2.582	€ 2.648
300	€ 672	€ 806	€ 940	€ 1.075	€ 1.209	€ 1.326	€ 1.440	€ 1.571	€ 1.701	€ 1.832	€ 1.937	€ 2.066	€ 2.195	€ 2.325	€ 2.421	€ 2.548	€ 2.676	€ 2.765	€ 2.890	€ 3.016	€ 3.098	€ 3.177
350	€ 784	€ 940	€ 1.097	€ 1.254	€ 1.411	€ 1.547	€ 1.680	€ 1.832	€ 1.985	€ 2.138	€ 2.260	€ 2.411	€ 2.561	€ 2.712	€ 2.824	€ 2.973	€ 3.121	€ 3.226	€ 3.372	€ 3.519	€ 3.615	€ 3.707
400	€ 896	€ 1.075	€ 1.254	€ 1.433	€ 1.612	€ 1.768	€ 1.920	€ 2.094	€ 2.269	€ 2.443	€ 2.583	€ 2.755	€ 2.927	€ 3.099	€ 3.228	€ 3.398	€ 3.567	€ 3.686	€ 3.854	€ 4.021	€ 4.131	€ 4.236
450	€ 1.008	€ 1.209	€ 1.411	€ 1.612	€ 1.814	€ 1.989	€ 2.159	€ 2.356	€ 2.552	€ 2.748	€ 2.906	€ 3.099	€ 3.293	€ 3.487	€ 3.631	€ 3.822	€ 4.013	€ 4.147	€ 4.336	€ 4.524	€ 4.648	€ 4.766
500	€ 1.120	€ 1.343	€ 1.567	€ 1.791	€ 2.015	€ 2.210	€ 2.399	€ 2.618	€ 2.836	€ 3.054	€ 3.229	€ 3.444	€ 3.659	€ 3.874	€ 4.035	€ 4.247	€ 4.459	€ 4.608	€ 4.817	€ 5.027	€ 5.164	€ 5.295
550	€ 1.231	€ 1.478	€ 1.724	€ 1.970	€ 2.217	€ 2.431	€ 2.639	€ 2.879	€ 3.119	€ 3.359	€ 3.551	€ 3.788	€ 4.025	€ 4.262	€ 4.438	€ 4.672	€ 4.905	€ 5.069	€ 5.299	€ 5.530	€ 5.680	€ 5.825
600	€ 1.343	€ 1.612	€ 1.881	€ 2.150	€ 2.418	€ 2.652	€ 2.879	€ 3.141	€ 3.403	€ 3.665	€ 3.874	€ 4.133	€ 4.391	€ 4.649	€ 4.841	€ 5.096	€ 5.351	€ 5.530	€ 5.781	€ 6.032	€ 6.197	€ 6.355
650	€ 1.455	€ 1.746	€ 2.038	€ 2.329	€ 2.620	€ 2.873	€ 3.119	€ 3.403	€ 3.686	€ 3.970	€ 4.197	€ 4.477	€ 4.757	€ 5.036	€ 5.245	€ 5.521	€ 5.797	€ 5.990	€ 6.263	€ 6.535	€ 6.713	€ 6.884
700	€ 1.567	€ 1.881	€ 2.194	€ 2.508	€ 2.821	€ 3.094	€ 3.359	€ 3.665	€ 3.970	€ 4.275	€ 4.520	€ 4.821	€ 5.123	€ 5.424	€ 5.648	€ 5.946	€ 6.243	€ 6.451	€ 6.744	€ 7.038	€ 7.230	€ 7.414
750	€ 1.679	€ 2.015	€ 2.351	€ 2.687	€ 3.023	€ 3.315	€ 3.599	€ 3.926	€ 4.253	€ 4.581	€ 4.843	€ 5.166	€ 5.488	€ 5.811	€ 6.052	€ 6.370	€ 6.689	€ 6.912	€ 7.226	€ 7.540	€ 7.746	€ 7.943
800	€ 1.791	€ 2.150	€ 2.508	€ 2.866	€ 3.224	€ 3.536	€ 3.839	€ 4.188	€ 4.537	€ 4.886	€ 5.166	€ 5.510	€ 5.854	€ 6.199	€ 6.455	€ 6.795	€ 7.135	€ 7.373	€ 7.708	€ 8.043	€ 8.262	€ 8.473
850	€ 1.903	€ 2.284	€ 2.665	€ 3.045	€ 3.426	€ 3.757	€ 4.079	€ 4.450	€ 4.821	€ 5.191	€ 5.488	€ 5.854	€ 6.220	€ 6.586	€ 6.859	€ 7.220	€ 7.581	€ 7.834	€ 8.190	€ 8.546	€ 8.779	€ 9.002
900	€ 2.015	€ 2.418	€ 2.821	€ 3.224	€ 3.627	€ 3.978	€ 4.319	€ 4.712	€ 5.104	€ 5.497	€ 5.811	€ 6.199	€ 6.586	€ 6.974	€ 7.262	€ 7.644	€ 8.027	€ 8.294	€ 8.671	€ 9.048	€ 9.295	€ 9.532
950	€ 2.127	€ 2.553	€ 2.978	€ 3.403	€ 3.829	€ 4.199	€ 4.559	€ 4.973	€ 5.388	€ 5.802	€ 6.134	€ 6.543	€ 6.952	€ 7.361	€ 7.666	€ 8.069	€ 8.473	€ 8.755	€ 9.153	€ 9.551	€ 9.812	€ 10.061
1000	€ 2.239	€ 2.687	€ 3.135	€ 3.583	€ 4.030	€ 4.420	€ 4.799	€ 5.235	€ 5.671	€ 6.108	€ 6.457	€ 6.888	€ 7.318	€ 7.748	€ 8.069	€ 8.494	€ 8.918	€ 9.216	€ 9.635	€ 10.054	€ 10.328	€ 10.591

Inclusive Fabric Support Profiles

Ferrari W96
Ready Fabric

Width

Projection	250	300	350	400	450	500	550	600	650	700	750	800	850	900	950	1000	1050	1100	1150	1200	1250	1300
200	€ 631	€ 757	€ 883	€ 1.009	€ 1.135	€ 1.250	€ 1.362	€ 1.486	€ 1.610	€ 1.734	€ 1.840	€ 1.963	€ 2.086	€ 2.208	€ 2.309	€ 2.431	€ 2.552	€ 2.648	€ 2.769	€ 2.889	€ 2.981	€ 3.070
250	€ 789	€ 946	€ 1.104	€ 1.262	€ 1.419	€ 1.563	€ 1.703	€ 1.858	€ 2.013	€ 2.167	€ 2.301	€ 2.454	€ 2.607	€ 2.761	€ 2.887	€ 3.038	€ 3.190	€ 3.310	€ 3.461	€ 3.611	€ 3.726	€ 3.837
300	€ 946	€ 1.135	€ 1.325	€ 1.514	€ 1.703	€ 1.875	€ 2.044	€ 2.229	€ 2.415	€ 2.601	€ 2.761	€ 2.945	€ 3.129	€ 3.313	€ 3.464	€ 3.646	€ 3.828	€ 3.973	€ 4.153	€ 4.334	€ 4.471	€ 4.605
350	€ 1.104	€ 1.325	€ 1.545	€ 1.766	€ 1.987	€ 2.188	€ 2.384	€ 2.601	€ 2.818	€ 3.034	€ 3.221	€ 3.435	€ 3.650	€ 3.865	€ 4.041	€ 4.254	€ 4.467	€ 4.635	€ 4.845	€ 5.056	€ 5.216	€ 5.372
400	€ 1.262	€ 1.514	€ 1.766	€ 2.019	€ 2.271	€ 2.500	€ 2.725	€ 2.972	€ 3.220	€ 3.468	€ 3.681	€ 3.926	€ 4.172	€ 4.417	€ 4.618	€ 4.862	€ 5.105	€ 5.297	€ 5.538	€ 5.778	€ 5.961	€ 6.140
450	€ 1.419	€ 1.703	€ 1.987	€ 2.271	€ 2.555	€ 2.813	€ 3.065	€ 3.344	€ 3.623	€ 3.901	€ 4.141	€ 4.417	€ 4.693	€ 4.969	€ 5.196	€ 5.469	€ 5.743	€ 5.959	€ 6.230	€ 6.501	€ 6.706	€ 6.907
500	€ 1.577	€ 1.892	€ 2.208	€ 2.523	€ 2.839	€ 3.125	€ 3.406	€ 3.716	€ 4.025	€ 4.335	€ 4.601	€ 4.908	€ 5.214	€ 5.521	€ 5.773	€ 6.077	€ 6.381	€ 6.621	€ 6.922	€ 7.223	€ 7.452	€ 7.674
550	€ 1.735	€ 2.082	€ 2.429	€ 2.776	€ 3.123	€ 3.438	€ 3.746	€ 4.087	€ 4.428	€ 4.768	€ 5.061	€ 5.399	€ 5.736	€ 6.073	€ 6.350	€ 6.685	€ 7.019	€ 7.283	€ 7.614	€ 7.945	€ 8.197	€ 8.442
600	€ 1.892	€ 2.271	€ 2.649	€ 3.028	€ 3.406	€ 3.750	€ 4.087	€ 4.459	€ 4.830	€ 5.202	€ 5.521	€ 5.889	€ 6.257	€ 6.625	€ 6.928	€ 7.292	€ 7.657	€ 7.945	€ 8.306	€ 8.667	€ 8.942	€ 9.209
650	€ 2.050	€ 2.460	€ 2.870	€ 3.280	€ 3.690	€ 4.063	€ 4.428	€ 4.830	€ 5.233	€ 5.635	€ 5.981	€ 6.380	€ 6.779	€ 7.178	€ 7.505	€ 7.900	€ 8.295	€ 8.607	€ 8.998	€ 9.390	€ 9.687	€ 9.977
700	€ 2.208	€ 2.649	€ 3.091	€ 3.533	€ 3.974	€ 4.375	€ 4.768	€ 5.202	€ 5.635	€ 6.069	€ 6.441	€ 6.871	€ 7.300	€ 7.730	€ 8.082	€ 8.508	€ 8.933	€ 9.269	€ 9.691	€ 10.112	€ 10.432	€ 10.744
750	€ 2.366	€ 2.839	€ 3.312	€ 3.785	€ 4.258	€ 4.688	€ 5.109	€ 5.573	€ 6.038	€ 6.502	€ 6.902	€ 7.362	€ 7.822	€ 8.282	€ 8.660	€ 9.115	€ 9.571	€ 9.931	€ 10.383	€ 10.834	€ 11.177	€ 11.512
800	€ 2.523	€ 3.028	€ 3.533	€ 4.037	€ 4.542	€ 5.000	€ 5.449	€ 5.945	€ 6.440	€ 6.936	€ 7.362	€ 7.852	€ 8.343	€ 8.834	€ 9.237	€ 9.723	€ 10.209	€ 10.594	€ 11.075	€ 11.557	€ 11.922	€ 12.279
850	€ 2.681	€ 3.217	€ 3.753	€ 4.290	€ 4.826	€ 5.313	€ 5.790	€ 6.316	€ 6.843	€ 7.369	€ 7.822	€ 8.343	€ 8.865	€ 9.386	€ 9.814	€ 10.331	€ 10.847	€ 11.256	€ 11.767	€ 12.279	€ 12.668	€ 13.047
900	€ 2.839	€ 3.406	€ 3.974	€ 4.542	€ 5.110	€ 5.625	€ 6.131	€ 6.688	€ 7.245	€ 7.803	€ 8.282	€ 8.834	€ 9.386	€ 9.938	€ 10.391	€ 10.938	€ 11.485	€ 11.918	€ 12.459	€ 13.001	€ 13.413	€ 13.814
950	€ 2.996	€ 3.596	€ 4.195	€ 4.794	€ 5.393	€ 5.938	€ 6.471	€ 7.059	€ 7.648	€ 8.236	€ 8.742	€ 9.325	€ 9.908	€ 10.490	€ 10.969	€ 11.546	€ 12.123	€ 12.580	€ 13.152	€ 13.723	€ 14.158	€ 14.581
1000	€ 3.154	€ 3.785	€ 4.416	€ 5.047	€ 5.677	€ 6.250	€ 6.812	€ 7.431	€ 8.050	€ 8.670	€ 9.202	€ 9.816	€ 10.429	€ 11.042	€ 11.546	€ 12.154	€ 12.761	€ 13.242	€ 13.844	€ 14.446	€ 14.903	€ 15.349

Without Fabric Support Profiles

Ferrari W96
Ready Fabric

Width

Projection	250	300	350	400	450	500	550	600	650	700	750	800	850	900	950	1000	1050	1100	1150	1200	1250	1300
200	€ 509	€ 611	€ 713	€ 815	€ 917	€ 1.007	€ 1.095	€ 1.195	€ 1.294	€ 1.394	€ 1.476	€ 1.575	€ 1.673	€ 1.771	€ 1.848	€ 1.945	€ 2.042	€ 2.114	€ 2.210	€ 2.306	€ 2.374	€ 2.438
250	€ 637	€ 764	€ 891	€ 1.019	€ 1.146	€ 1.259	€ 1.369	€ 1.493	€ 1.618	€ 1.742	€ 1.845	€ 1.968	€ 2.091	€ 2.214	€ 2.310	€ 2.431	€ 2.553	€ 2.643	€ 2.763	€ 2.883	€ 2.967	€ 3.048
300	€ 764	€ 917	€ 1.070	€ 1.223	€ 1.375	€ 1.511	€ 1.643	€ 1.792	€ 1.942	€ 2.091	€ 2.214	€ 2.362	€ 2.509	€ 2.657	€ 2.772	€ 2.918	€ 3.063	€ 3.171	€ 3.315	€ 3.459	€ 3.560	€ 3.658
350	€ 891	€ 1.070	€ 1.248	€ 1.426	€ 1.605	€ 1.763	€ 1.917	€ 2.091	€ 2.265	€ 2.439	€ 2.583	€ 2.755	€ 2.928	€ 3.100	€ 3.234	€ 3.404	€ 3.574	€ 3.700	€ 3.868	€ 4.036	€ 4.154	€ 4.267
400	€ 1.019	€ 1.223	€ 1.426	€ 1.630	€ 1.834	€ 2.014	€ 2.190	€ 2.390	€ 2.589	€ 2.788	€ 2.952	€ 3.149	€ 3.346	€ 3.543	€ 3.696	€ 3.890	€ 4.085	€ 4.228	€ 4.420	€ 4.613	€ 4.747	€ 4.877
450	€ 1.146	€ 1.375	€ 1.605	€ 1.834	€ 2.063	€ 2.266	€ 2.464	€ 2.688	€ 2.912	€ 3.136	€ 3.321	€ 3.543	€ 3.764	€ 3.986	€ 4.158	€ 4.376	€ 4.595	€ 4.757	€ 4.973	€ 5.189	€ 5.340	€ 5.486
500	€ 1.273	€ 1.528	€ 1.783	€ 2.038	€ 2.292	€ 2.518	€ 2.738	€ 2.987	€ 3.236	€ 3.485	€ 3.690	€ 3.936	€ 4.182	€ 4.428	€ 4.620	€ 4.863	€ 5.106	€ 5.285	€ 5.526	€ 5.766	€ 5.934	€ 6.096
550	€ 1.401	€ 1.681	€ 1.961	€ 2.241	€ 2.522	€ 2.770	€ 3.012	€ 3.286	€ 3.559	€ 3.833	€ 4.059	€ 4.330	€ 4.601	€ 4.871	€ 5.081	€ 5.349	€ 5.616	€ 5.814	€ 6.078	€ 6.342	€ 6.527	€ 6.706
600	€ 1.528	€ 1.834	€ 2.139	€ 2.445	€ 2.751	€ 3.022	€ 3.286	€ 3.584	€ 3.883	€ 4.182	€ 4.428	€ 4.724	€ 5.019	€ 5.314	€ 5.543	€ 5.835	€ 6.127	€ 6.342	€ 6.631	€ 6.919	€ 7.121	€ 7.315
650	€ 1.656	€ 1.987	€ 2.318	€ 2.649	€ 2.980	€ 3.273	€ 3.559	€ 3.883	€ 4.207	€ 4.530	€ 4.797	€ 5.117	€ 5.437	€ 5.757	€ 6.005	€ 6.321	€ 6.638	€ 6.871	€ 7.183	€ 7.496	€ 7.714	€ 7.925
700	€ 1.783	€ 2.139	€ 2.496	€ 2.853	€ 3.209	€ 3.525	€ 3.833	€ 4.182	€ 4.530	€ 4.879	€ 5.167	€ 5.511	€ 5.855	€ 6.200	€ 6.467	€ 6.808	€ 7.148	€ 7.399	€ 7.736	€ 8.072	€ 8.307	€ 8.534
750	€ 1.910	€ 2.292	€ 2.674	€ 3.056	€ 3.438	€ 3.777	€ 4.107	€ 4.480	€ 4.854	€ 5.227	€ 5.536	€ 5.905	€ 6.274	€ 6.643	€ 6.929	€ 7.294	€ 7.659	€ 7.928	€ 8.288	€ 8.649	€ 8.901	€ 9.144
800	€ 2.038	€ 2.445	€ 2.853	€ 3.260	€ 3.668	€ 4.029	€ 4.381	€ 4.779	€ 5.177	€ 5.576	€ 5.905	€ 6.298	€ 6.692	€ 7.085	€ 7.391	€ 7.780	€ 8.169	€ 8.457	€ 8.841	€ 9.225	€ 9.494	€ 9.754
850	€ 2.165	€ 2.598	€ 3.031	€ 3.464	€ 3.897	€ 4.281	€ 4.655	€ 5.078	€ 5.501	€ 5.924	€ 6.274	€ 6.692	€ 7.110	€ 7.528	€ 7.853	€ 8.267	€ 8.680	€ 8.985	€ 9.393	€ 9.802	€ 10.087	€ 10.363
900	€ 2.292	€ 2.751	€ 3.209	€ 3.668	€ 4.126	€ 4.533	€ 4.929	€ 5.377	€ 5.825	€ 6.273	€ 6.643	€ 7.085	€ 7.528	€ 7.971	€ 8.315	€ 8.753	€ 9.190	€ 9.514	€ 9.946	€ 10.378	€ 10.681	€ 10.973
950	€ 2.420	€ 2.904	€ 3.387	€ 3.871	€ 4.355	€ 4.784	€ 5.202	€ 5.675	€ 6.148	€ 6.621	€ 7.012	€ 7.479	€ 7.947	€ 8.414	€ 8.777	€ 9.239	€ 9.701	€ 10.042	€ 10.499	€ 10.955	€ 11.274	€ 11.582
1000	€ 2.547	€ 3.056	€ 3.566	€ 4.075	€ 4.585	€ 5.036	€ 5.476	€ 5.974	€ 6.472	€ 6.970	€ 7.381	€ 7.873	€ 8.365	€ 8.857	€ 9.239	€ 9.725	€ 10.212	€ 10.571	€ 11.051	€ 11.532	€ 11.868	€ 12.192

Inclusive Fabric Support Profiles

Trapezium Fabric
Ready Fabric (3D Flexy / Flexy Plain / Stam 6002)

Width

Projection	250	300	350	400	450	500	550	600	650	700	750	800	850	900	950	1000	1050	1100	1150	1200	1250	1300
200	€ 662	€ 794	€ 927	€ 1.059	€ 1.192	€ 1.313	€ 1.431	€ 1.561	€ 1.691	€ 1.821	€ 1.934	€ 2.063	€ 2.192	€ 2.321	€ 2.428	€ 2.556	€ 2.683	€ 2.786	€ 2.912	€ 3.039	€ 3.137	€ 3.232
250	€ 828	€ 993	€ 1.159	€ 1.324	€ 1.490	€ 1.641	€ 1.789	€ 1.951	€ 2.114	€ 2.277	€ 2.418	€ 2.579	€ 2.740	€ 2.901	€ 3.035	€ 3.195	€ 3.354	€ 3.482	€ 3.640	€ 3.799	€ 3.921	€ 4.040
300	€ 993	€ 1.192	€ 1.390	€ 1.589	€ 1.788	€ 1.969	€ 2.147	€ 2.342	€ 2.537	€ 2.732	€ 2.901	€ 3.095	€ 3.288	€ 3.481	€ 3.642	€ 3.833	€ 4.025	€ 4.179	€ 4.369	€ 4.559	€ 4.705	€ 4.848
350	€ 1.159	€ 1.390	€ 1.622	€ 1.854	€ 2.085	€ 2.297	€ 2.504	€ 2.732	€ 2.960	€ 3.187	€ 3.385	€ 3.610	€ 3.836	€ 4.062	€ 4.249	€ 4.472	€ 4.696	€ 4.875	€ 5.097	€ 5.318	€ 5.489	€ 5.656
400	€ 1.324	€ 1.589	€ 1.854	€ 2.119	€ 2.383	€ 2.625	€ 2.862	€ 3.122	€ 3.382	€ 3.643	€ 3.868	€ 4.126	€ 4.384	€ 4.642	€ 4.856	€ 5.111	€ 5.367	€ 5.572	€ 5.825	€ 6.078	€ 6.273	€ 6.464
450	€ 1.490	€ 1.788	€ 2.085	€ 2.383	€ 2.681	€ 2.953	€ 3.220	€ 3.513	€ 3.805	€ 4.098	€ 4.352	€ 4.642	€ 4.932	€ 5.222	€ 5.463	€ 5.750	€ 6.038	€ 6.268	€ 6.553	€ 6.838	€ 7.058	€ 7.272
500	€ 1.655	€ 1.986	€ 2.317	€ 2.648	€ 2.979	€ 3.281	€ 3.578	€ 3.903	€ 4.228	€ 4.553	€ 4.835	€ 5.158	€ 5.480	€ 5.802	€ 6.070	€ 6.389	€ 6.709	€ 6.964	€ 7.281	€ 7.598	€ 7.842	€ 8.080
550	€ 1.821	€ 2.185	€ 2.549	€ 2.913	€ 3.277	€ 3.609	€ 3.935	€ 4.293	€ 4.651	€ 5.009	€ 5.319	€ 5.673	€ 6.028	€ 6.382	€ 6.677	€ 7.028	€ 7.379	€ 7.661	€ 8.009	€ 8.357	€ 8.626	€ 8.888
600	€ 1.986	€ 2.383	€ 2.781	€ 3.178	€ 3.575	€ 3.938	€ 4.293	€ 4.683	€ 5.074	€ 5.464	€ 5.802	€ 6.189	€ 6.576	€ 6.963	€ 7.284	€ 7.667	€ 8.050	€ 8.357	€ 8.737	€ 9.117	€ 9.410	€ 9.696
650	€ 2.152	€ 2.582	€ 3.012	€ 3.443	€ 3.873	€ 4.266	€ 4.651	€ 5.074	€ 5.497	€ 5.919	€ 6.286	€ 6.705	€ 7.124	€ 7.543	€ 7.891	€ 8.306	€ 8.721	€ 9.054	€ 9.465	€ 9.877	€ 10.194	€ 10.504
700	€ 2.317	€ 2.781	€ 3.244	€ 3.707	€ 4.171	€ 4.594	€ 5.009	€ 5.464	€ 5.919	€ 6.375	€ 6.769	€ 7.221	€ 7.672	€ 8.123	€ 8.498	€ 8.945	€ 9.392	€ 9.750	€ 10.193	€ 10.637	€ 10.979	€ 11.312
750	€ 2.483	€ 2.979	€ 3.476	€ 3.972	€ 4.469	€ 4.922	€ 5.366	€ 5.854	€ 6.342	€ 6.830	€ 7.253	€ 7.736	€ 8.220	€ 8.703	€ 9.104	€ 9.584	€ 10.063	€ 10.447	€ 10.921	€ 11.396	€ 11.763	€ 12.121
800	€ 2.648	€ 3.178	€ 3.707	€ 4.237	€ 4.767	€ 5.250	€ 5.724	€ 6.245	€ 6.765	€ 7.285	€ 7.736	€ 8.252	€ 8.768	€ 9.284	€ 9.711	€ 10.223	€ 10.734	€ 11.143	€ 11.650	€ 12.156	€ 12.547	€ 12.929
850	€ 2.814	€ 3.376	€ 3.939	€ 4.502	€ 5.065	€ 5.578	€ 6.082	€ 6.635	€ 7.188	€ 7.741	€ 8.220	€ 8.768	€ 9.316	€ 9.864	€ 10.318	€ 10.861	€ 11.405	€ 11.840	€ 12.378	€ 12.916	€ 13.331	€ 13.737
900	€ 2.979	€ 3.575	€ 4.171	€ 4.767	€ 5.363	€ 5.906	€ 6.440	€ 7.025	€ 7.611	€ 8.196	€ 8.703	€ 9.284	€ 9.864	€ 10.444	€ 10.925	€ 11.500	€ 12.075	€ 12.536	€ 13.106	€ 13.676	€ 14.115	€ 14.545
950	€ 3.145	€ 3.774	€ 4.403	€ 5.031	€ 5.660	€ 6.234	€ 6.797	€ 7.415	€ 8.033	€ 8.651	€ 9.187	€ 9.799	€ 10.412	€ 11.024	€ 11.532	€ 12.139	€ 12.746	€ 13.232	€ 13.834	€ 14.435	€ 14.899	€ 15.353
1000	€ 3.310	€ 3.972	€ 4.634	€ 5.296	€ 5.958	€ 6.563	€ 7.155	€ 7.806	€ 8.456	€ 9.107	€ 9.670	€ 10.315	€ 10.960	€ 11.604	€ 12.139	€ 12.778	€ 13.417	€ 13.929	€ 14.562	€ 15.195	€ 15.684	€ 16.161

Without Fabric Support Profiles

Trapezium Fabric
Ready Fabric (3D Flexy / Flexy Plain / Stam 6002)

Width

Projectiom	250	300	350	400	450	500	550	600	650	700	750	800	850	900	950	1000	1050	1100	1150	1200	1250	1300
200	€ 541	€ 649	€ 757	€ 865	€ 973	€ 1.070	€ 1.164	€ 1.270	€ 1.376	€ 1.481	€ 1.570	€ 1.674	€ 1.779	€ 1.884	€ 1.966	€ 2.070	€ 2.173	€ 2.252	€ 2.354	€ 2.456	€ 2.530	€ 2.601
250	€ 676	€ 811	€ 946	€ 1.081	€ 1.216	€ 1.337	€ 1.455	€ 1.587	€ 1.719	€ 1.852	€ 1.962	€ 2.093	€ 2.224	€ 2.355	€ 2.458	€ 2.587	€ 2.717	€ 2.814	€ 2.942	€ 3.070	€ 3.162	€ 3.251
300	€ 811	€ 973	€ 1.135	€ 1.297	€ 1.460	€ 1.605	€ 1.746	€ 1.905	€ 2.063	€ 2.222	€ 2.355	€ 2.512	€ 2.669	€ 2.826	€ 2.950	€ 3.105	€ 3.260	€ 3.377	€ 3.531	€ 3.684	€ 3.794	€ 3.901
350	€ 946	€ 1.135	€ 1.325	€ 1.514	€ 1.703	€ 1.872	€ 2.037	€ 2.222	€ 2.407	€ 2.592	€ 2.747	€ 2.930	€ 3.113	€ 3.297	€ 3.441	€ 3.622	€ 3.804	€ 3.940	€ 4.119	€ 4.298	€ 4.427	€ 4.551
400	€ 1.081	€ 1.297	€ 1.514	€ 1.730	€ 1.946	€ 2.139	€ 2.328	€ 2.539	€ 2.751	€ 2.963	€ 3.140	€ 3.349	€ 3.558	€ 3.768	€ 3.933	€ 4.140	€ 4.347	€ 4.503	€ 4.708	€ 4.912	€ 5.059	€ 5.201
450	€ 1.216	€ 1.460	€ 1.703	€ 1.946	€ 2.189	€ 2.407	€ 2.619	€ 2.857	€ 3.095	€ 3.333	€ 3.532	€ 3.768	€ 4.003	€ 4.238	€ 4.425	€ 4.657	€ 4.890	€ 5.066	€ 5.296	€ 5.526	€ 5.692	€ 5.852
500	€ 1.352	€ 1.622	€ 1.892	€ 2.162	€ 2.433	€ 2.674	€ 2.910	€ 3.174	€ 3.439	€ 3.703	€ 3.925	€ 4.186	€ 4.448	€ 4.709	€ 4.916	€ 5.175	€ 5.434	€ 5.629	€ 5.885	€ 6.140	€ 6.324	€ 6.502
550	€ 1.487	€ 1.784	€ 2.081	€ 2.379	€ 2.676	€ 2.942	€ 3.201	€ 3.492	€ 3.783	€ 4.074	€ 4.317	€ 4.605	€ 4.893	€ 5.180	€ 5.408	€ 5.692	€ 5.977	€ 6.192	€ 6.473	€ 6.755	€ 6.956	€ 7.152
600	€ 1.622	€ 1.946	€ 2.271	€ 2.595	€ 2.919	€ 3.209	€ 3.492	€ 3.809	€ 4.127	€ 4.444	€ 4.709	€ 5.023	€ 5.337	€ 5.651	€ 5.899	€ 6.210	€ 6.520	€ 6.755	€ 7.062	€ 7.369	€ 7.589	€ 7.802
650	€ 1.757	€ 2.108	€ 2.460	€ 2.811	€ 3.163	€ 3.476	€ 3.783	€ 4.127	€ 4.470	€ 4.814	€ 5.102	€ 5.442	€ 5.782	€ 6.122	€ 6.391	€ 6.727	€ 7.064	€ 7.317	€ 7.650	€ 7.983	€ 8.221	€ 8.452
700	€ 1.892	€ 2.271	€ 2.649	€ 3.027	€ 3.406	€ 3.744	€ 4.074	€ 4.444	€ 4.814	€ 5.185	€ 5.494	€ 5.861	€ 6.227	€ 6.593	€ 6.883	€ 7.245	€ 7.607	€ 7.880	€ 8.238	€ 8.597	€ 8.854	€ 9.103
750	€ 2.027	€ 2.433	€ 2.838	€ 3.244	€ 3.649	€ 4.011	€ 4.365	€ 4.761	€ 5.158	€ 5.555	€ 5.887	€ 6.279	€ 6.672	€ 7.064	€ 7.374	€ 7.762	€ 8.150	€ 8.443	€ 8.827	€ 9.211	€ 9.486	€ 9.753
800	€ 2.162	€ 2.595	€ 3.027	€ 3.460	€ 3.892	€ 4.279	€ 4.656	€ 5.079	€ 5.502	€ 5.925	€ 6.279	€ 6.698	€ 7.116	€ 7.535	€ 7.866	€ 8.280	€ 8.694	€ 9.006	€ 9.415	€ 9.825	€ 10.119	€ 10.403
850	€ 2.298	€ 2.757	€ 3.217	€ 3.676	€ 4.136	€ 4.546	€ 4.947	€ 5.396	€ 5.846	€ 6.296	€ 6.672	€ 7.116	€ 7.561	€ 8.006	€ 8.357	€ 8.797	€ 9.237	€ 9.569	€ 10.004	€ 10.439	€ 10.751	€ 11.053
900	€ 2.433	€ 2.919	€ 3.406	€ 3.892	€ 4.379	€ 4.814	€ 5.238	€ 5.714	€ 6.190	€ 6.666	€ 7.064	€ 7.535	€ 8.006	€ 8.477	€ 8.849	€ 9.315	€ 9.781	€ 10.132	€ 10.592	€ 11.053	€ 11.383	€ 11.703
950	€ 2.568	€ 3.082	€ 3.595	€ 4.109	€ 4.622	€ 5.081	€ 5.529	€ 6.031	€ 6.534	€ 7.036	€ 7.457	€ 7.954	€ 8.451	€ 8.948	€ 9.341	€ 9.832	€ 10.324	€ 10.695	€ 11.181	€ 11.667	€ 12.016	€ 12.354
1000	€ 2.703	€ 3.244	€ 3.784	€ 4.325	€ 4.866	€ 5.348	€ 5.820	€ 6.349	€ 6.878	€ 7.407	€ 7.849	€ 8.372	€ 8.896	€ 9.419	€ 9.832	€ 10.350	€ 10.867	€ 11.258	€ 11.769	€ 12.281	€ 12.648	€ 13.004

Notifications

Hot dip galvanizing products can't provide %100 smoothness.

Hardware materials (epoxy, sealant, anchorage fittings etc…) aren't included in the price.

Suitable type of PURE model remote control will be supplied according to project size.

Sensors can't be integrated to the products with single motor products. If you'd like to use it you must change the motor with ALTUS model.

Rain sensors you must be combined with Dry Contact Transmitter or RS485.

All sensors has to be integrated with a Universal receiver. Therefore a universal receiver shall be added for each product with a sensor.

All electrical equipments are designed according to 220V / 50Hz. The responsibility belongs to customer about the electrical source. If you have another electrical sources please inform PALMIYE.

For further information please contact PALMIYE

PALMIYE

www.palmiye.eu